YAMAHA

OWNER'S MANUAL

YZF-R1P

5PW-28199-20

EAU00000

INTRODUCTION

Congratulations on your purchase of the Yamaha YZF-R1. This model is the result of Yamaha's vast experience in the production of fine sporting, touring, and pacesetting racing machines. It represents the high degree of craftsmanship and reliability that have made Yamaha a leader in these fields.

This manual will give you an understanding of the operation, inspection, and basic maintenance of this motorcycle. If you have any questions concerning the operation or maintenance of your motorcycle, please consult a Yamaha dealer.

IMPORTANT MANUAL INFORMATION

EAU00005

Particularly important information is distinguished in this manual by the following notations

⚠	**The Safety Alert Symbol means ATTENTION! BECOME ALERT! YOUR SAFETY IS INVOLVED!**
⚠ WARNING	**Failure to follow WARNING instructions could result in severe injury or death to the motorcycle operator, a bystander, or a person inspecting or repairing the motorcycle.**
CAUTION:	**A CAUTION indicates special precautions that must be taken to avoid damage to the motorcycle.**
NOTE:	A NOTE provides key information to make procedures easier or clearer

NOTE:

- This manual should be considered a permanent part of this motorcycle and should remain with it even if the motorcycle is subsequently sold
- Yamaha continually seeks advancements in product design and quality Therefore, while this manual contains the most current product information available at the time of printing, there may be minor discrepancies between your motorcycle and this manual If you have any questions concerning this manual, please consult your Yamaha dealer

IMPORTANT MANUAL INFORMATION

EW000002

WARNING

PLEASE READ THIS MANUAL CAREFULLY AND COMPLETELY BEFORE OPERATING THIS MOTORCYCLE.

IMPORTANT MANUAL INFORMATION

EAU04229

YZF-R1P
OWNER'S MANUAL
©2001 by Yamaha Motor Co., Ltd.
1st edition, November 2001
All rights reserved.
Any reprinting or unauthorized use
without the written permission of
Yamaha Motor Co., Ltd.
is expressly prohibited.
Printed in Japan.

EAU00009

TABLE OF CONTENTS

1 SAFETY INFORMATION 1

2 DESCRIPTION 2

3 INSTRUMENT AND CONTROL FUNCTIONS 3

4 PRE-OPERATION CHECKS 4

5 OPERATION AND IMPORTANT RIDING POINTS 5

6 PERIODIC MAINTENANCE AND MINOR REPAIR 6

7 MOTORCYCLE CARE AND STORAGE 7

8 SPECIFICATIONS 8

9 CONSUMER INFORMATION 9

INDEX

⚠ SAFETY INFORMATION

Safe riding 1-1
Protective apparel 1-3
Modifications 1-3
Loading and accessories 1-3
Gasoline and exhaust gas 1-5
Location of important labels 1-7

⚠ SAFETY INFORMATION

EAU04193

1

MOTORCYCLES ARE SINGLE TRACK VEHICLES. THEIR SAFE USE AND OPERATION ARE DEPENDENT UPON THE USE OF PROPER RIDING TECHNIQUES AS WELL AS THE EXPERTISE OF THE OPERATOR EVERY OPERATOR SHOULD KNOW THE FOLLOWING REQUIREMENTS BEFORE RIDING THIS MOTORCYCLE

HE OR SHE SHOULD

1 OBTAIN THOROUGH INSTRUCTIONS FROM A COMPETENT SOURCE ON ALL ASPECTS OF MOTORCYCLE OPERATION
2 OBSERVE THE WARNINGS AND MAINTENANCE REQUIREMENTS IN THE OWNER'S MANUAL
3 OBTAIN QUALIFIED TRAINING IN SAFE AND PROPER RIDING TECHNIQUES
4. OBTAIN PROFESSIONAL TECHNICAL SERVICE AS INDICATED BY THE OWNER'S MANUAL AND/OR WHEN MADE NECESSARY BY MECHANICAL CONDITIONS

Safe riding

1. Always make pre-operation checks Careful checks may help prevent an accident.
2. This motorcycle is designed to carry the operator and a passenger.
3. The failure of motorists to detect and recognize motorcycles in traffic is the predominating cause of automobile/motorcycle accidents Many accidents have been caused by an automobile driver who did not see the motorcycle. Making yourself conspicuous appears to be very effective in reducing the chance of this type of accident

Therefore

a Wear a brightly colored jacket
b Use extra caution when you are approaching and passing through intersections, since intersections are the most likely places for motorcycle accidents to occur.
c Ride where other motorists can see you Avoid riding in another motorist's blind spot

4. Many accidents involve inexperienced operators In fact, many operators who have been involved in accidents do not even have a current motorcycle license
   a Make sure that you are qualified and that you only lend your motorcycle to other qualified operators
   b Know your skills and limits. Staying within your limits may help you to avoid an accident
   c We recommend that you practice riding your motorcycle where there is no traffic until you have become thoroughly familiar with the motorcycle and all of its controls.
5. Many accidents have been caused by error of the motorcycle operator. A typical error made by the operator is veering wide on a turn due to EXCESSIVE SPEED or undercornering (insufficient lean angle for the speed).
   a Always obey the speed limit and never travel faster than warranted by road and traffic conditions
   b Always signal before turning or changing lanes. Make sure that other motorists can see you.
6 The posture of the operator and passenger is important for proper control
   a The operator should keep both hands on the handlebar and both feet on the operator footrests during operation to maintain control of the motorcycle.
   b. The passenger should always hold onto the operator, the seat strap or grab bar, if equipped, with both hands and keep both feet on the passenger footrests
   c Never carry a passenger unless he or she can firmly place both feet on the passenger footrests
7. Never ride under the influence of alcohol or other drugs.
8 This motorcycle is designed for on-road use only It is not suitable for off-road use.

Protective apparel

The majority of fatalities from motorcycle accidents are the result of head injuries The use of a safety helmet is the single most critical factor in the prevention or reduction of head injuries

1 Always wear an approved helmet
2 Wear a face shield or goggles Wind in your unprotected eyes could contribute to an impairment of vision that could delay seeing a hazard
3 The use of a jacket, heavy boots, trousers, gloves, etc , is effective in preventing or reducing abrasions or lacerations
4 Never wear loose-fitting clothes, otherwise they could catch on the control levers, footrests, or wheels and cause injury or an accident
5 Never touch the engine or exhaust system during or after operation They become very hot and can cause burns Always wear protective clothing that covers your legs, ankles, and feet
6 A passenger should also observe the above precautions

Modifications

Modifications made to this motorcycle not approved by Yamaha, or the removal of original equipment, may render the motorcycle unsafe for use and may cause severe personal injury Modifications may also make your motorcycle illegal to use

Loading and accessories

Adding accessories or cargo to your motorcycle can adversely affect stability and handling if the weight distribution of the motorcycle is changed To avoid the possibility of an accident, use extreme caution when adding cargo or accessories to your motorcycle Use extra care when riding a motorcycle that has added cargo or accessories Here are some general guidelines to follow if loading cargo or adding accessories to your motorcycle

Loading

The total weight of the operator, passenger, accessories and cargo must not exceed the maximum load limit of 202 kg. When loading within this weight limit, keep the following in mind:

1. Cargo and accessory weight should be kept as low and close to the motorcycle as possible. Make sure to distribute the weight as evenly as possible on both sides of the motorcycle to minimize imbalance or instability
2. Shifting weights can create a sudden imbalance Make sure that accessories and cargo are securely attached to the motorcycle before riding. Check accessory mounts and cargo restraints frequently
3. Never attach any large or heavy items to the handlebar, front fork, or front fender These items, including such cargo as sleeping bags, duffel bags, or tents, can create unstable handling or a slow steering response

Accessories

Genuine Yamaha accessories have been specifically designed for use on this motorcycle. Since Yamaha cannot test all other accessories that may be available, you must personally be responsible for the proper selection, installation and use of non-Yamaha accessories. Use extreme caution when selecting and installing any accessories

Keep the following guidelines in mind, as well as those provided under "Loading" when mounting accessories

1 Never install accessories or carry cargo that would impair the performance of your motorcycle Carefully inspect the accessory before using it to make sure that it does not in any way reduce ground clearance or cornering clearance, limit suspension travel, steering travel or control operation, or obscure lights or reflectors.

a Accessories fitted to the handlebar or the front fork area can create instability due to improper weight distribution or aerodynamic changes If accessories are added to the handlebar or front fork area, they must be as lightweight as possible and should be kept to a minimum

b Bulky or large accessories may seriously affect the stability of the motorcycle due to aerodynamic effects Wind may attempt to lift the motorcycle, or the motorcycle may become unstable in cross winds These accessories may also cause instability when passing or being passed by large vehicles

c Certain accessories can displace the operator from his or her normal riding position This improper position limits the freedom of movement of the operator and may limit control ability, therefore, such accessories are not recommended

2. Use caution when adding electrical accessories If electrical accessories exceed the capacity of the motorcycle's electrical system, an electric failure could result, which could cause a dangerous loss of lights or engine power

Gasoline and exhaust gas

1 GASOLINE IS HIGHLY FLAMMABLE

a Always turn the engine off when refueling

b Take care not to spill any gasoline on the engine or exhaust system when refueling

c Never refuel while smoking or in the vicinity of an open flame

2 Never start the engine or let it run for any length of time in a closed area The exhaust fumes are poisonous and may cause loss of consciousness and death within a short time Always operate your motorcycle in an area that has adequate ventilation.

3 Always turn the engine off before leaving the motorcycle unattended and remove the key from the main switch When parking the motorcycle, note the following.

a. The engine and exhaust system may be hot, therefore, park the motorcycle in a place where pedestrians or children are not likely to touch these hot areas.
b Do not park the motorcycle on a slope or soft ground, otherwise it may fall over
c Do not park the motorcycle near a flammable source (e.g., a kerosene heater, or near an open flame), otherwise it could catch fire.

4. When transporting the motorcycle in another vehicle, make sure that it is kept upright. If the motorcycle should lean over, gasoline may leak out of the fuel tank.
5. If you should swallow any gasoline, inhale a lot of gasoline vapor, or allow gasoline to get into your eyes, see your doctor immediately. If any gasoline spills on your skin or clothing, immediately wash the affected area with soap and water and change your clothes

AU02977

Location of important labels

Please read the following important labels carefully before operating this motorcycle

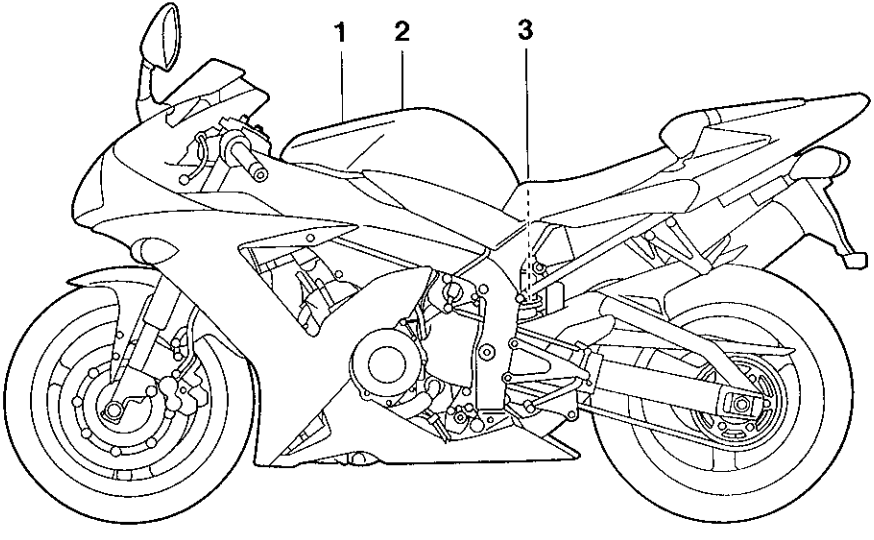

1

- Use PREMIUM unleaded gasoline with min 95 octane(RON)
- Utiliser une essence SUPER sans plomb d'un indice d'octance(RON) de min 95
- Nur Super Bleifei mit Mindestoktanzahl 95(ROZ) tanken
- Utilizzare benzina PREMIUM super senza piombo con almeno 95 ottani(RON)
- Utilice gasolina sin plomo que tenga como mínimo 95 octanos(RON)

SPW 2415E 00

2

WARNING

Before you operate this vehicle, read the owner's manual

English 3HP-21568-E0

3

DESCRIPTION

Left view 2-1
Right view 2-2
Controls and instruments 2-3

EAU00026

Left view

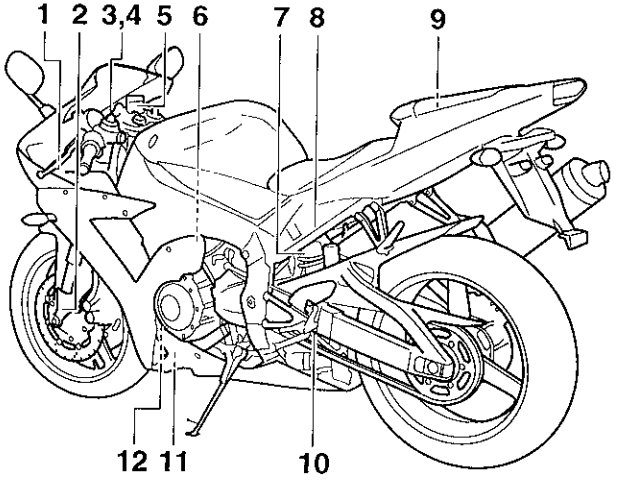

1	Fuse box	(page 6-35)
2	Front fork compression damping force adjusting screw	(page 3-20)
3	Front fork rebound damping force adjusting screw	(page 3-20)
4	Front fork spring preload adjusting bolt	(page 3-19)
5	Front brake fluid reservoir	(page 6-26)
6.	Throttle stop screw	(page 6-18)
7	Shock absorber assembly spring preload adjusting ring	(page 3-21)
8	Shock absorber assembly compression damping force adjusting screw	(page 3-22)
9	Owner's tool kit	(page 6-1)
10	Shock absorber assembly rebound damping force adjusting screw	(page 3-22)
11	Engine oil drain bolt	(page 6-10)
12	Engine oil filter cartridge	(page 6-10)

Right view

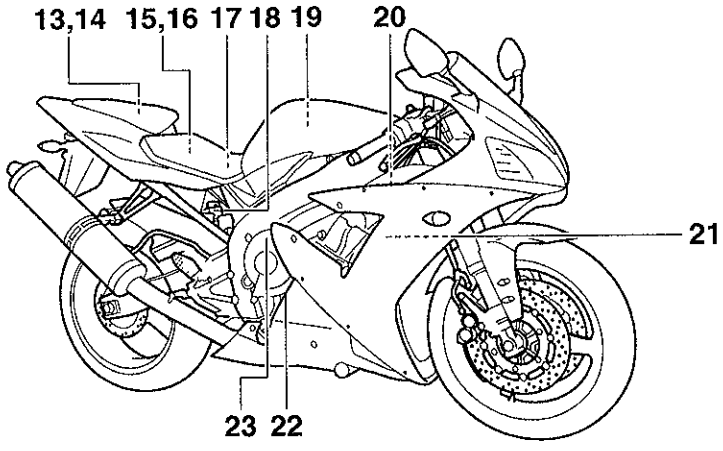

13. Luggage strap holders	(page 3-23)	19. Air filter element	(page 6-16)
14. Helmet holders	(page 3-17)	20. Radiator cap	(page 6-13)
15. Main fuse	(page 6-35)	21. Coolant reservoir	(page 6-14)
16. Electronic fuel injection fuse	(page 6-35)	22. Engine oil level check window	(page 6-9)
17. Battery	(page 6-33)	23. Engine oil filler cap	(page 6-9)
18 Rear brake fluid reservoir	(page 6-26)		

Controls and instruments

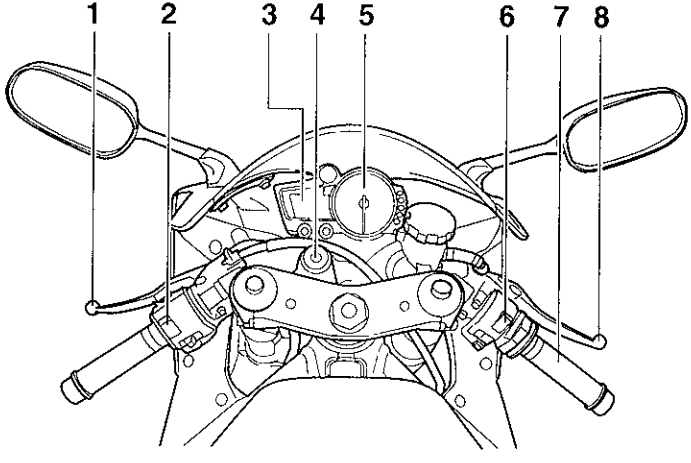

1 Clutch lever	(page 3-12)	5 Tachometer	(page 3-11)
2 Left handlebar switches	(page 3-11)	6 Right handlebar switches	(page 3-12)
3 Multi-function display	(page 3-6)	7 Throttle grip	(page 6-19)
4 Main switch/steering lock	(page 3-1)	8 Brake lever	(page 3-13)

INSTRUMENT AND CONTROL FUNCTIONS

Main switch/steering lock ... 3-1
Indicator and warning lights ... 3-2
Multi-function display ... 3-6
Tachometer ... 3-11
Handlebar switches ... 3-11
Clutch lever ... 3-12
Shift pedal ... 3-12
Brake lever ... 3-13
Brake pedal ... 3-13
Fuel tank cap ... 3-13
Fuel ... 3-15
Catalytic converter ... 3-16
Seats ... 3-16
Helmet holders ... 3-17
Storage compartment ... 3-18
Adjusting the front fork ... 3-19
Adjusting the shock absorber assembly ... 3-21
Luggage strap holders ... 3-23
EXUP system ... 3-23
Sidestand ... 3-24
Ignition circuit cut-off system ... 3-24

INSTRUMENT AND CONTROL FUNCTIONS

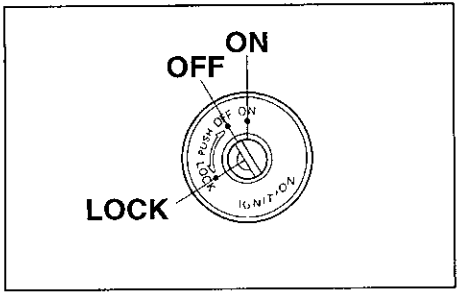

EAU00029

Main switch/steering lock

The main switch/steering lock controls the ignition and lighting systems, and is used to lock the steering The various positions are described below

EAU04562

ON

All electrical circuits are supplied with power, and the meter lighting, taillight, license plate light and auxiliary lights come on, and the engine can be started The key cannot be removed

NOTE:

The headlights come on automatically when the engine is started and stay on until the key is turned to "OFF", even if the engine stalls

EAU00038

OFF

All electrical systems are off The key can be removed

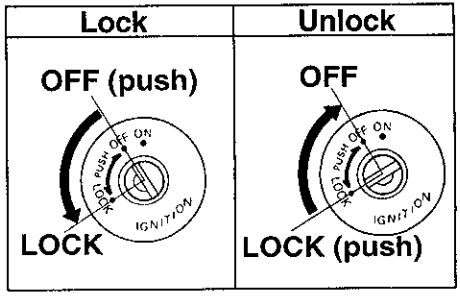

EAU00040

LOCK

The steering is locked, and all electrical systems are off The key can be removed

To lock the steering

1 Turn the handlebars all the way to the left
2 Push the key in from the "OFF" position, and then turn it to "LOCK" while still pushing it.
3 Remove the key

To unlock the steering

Push the key in, and then turn it to "OFF" while still pushing it

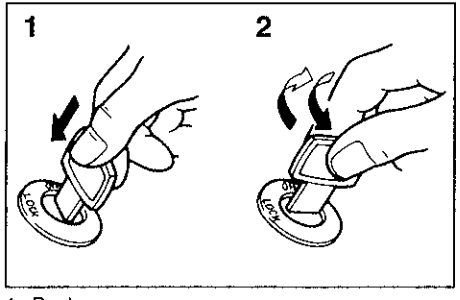

1 Push
2 Turn

EW000016

WARNING

Never turn the key to "OFF" or "LOCK" while the motorcycle is moving, otherwise the electrical systems will be switched off, which may result in loss of control or an accident. Make sure that the motorcycle is stopped before turning the key to "OFF" or "LOCK".

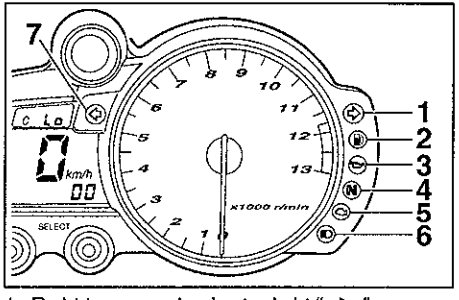

1 Right turn signal indicator light " ⇨ "
2 Fuel level warning light " ⛽ "
3 Oil level warning light " "
4 Neutral indicator light "N"
5 Engine trouble warning light " "
6 High beam indicator light " "
7 Left turn signal indicator light " ⇦ "

EAU03034

Indicator and warning lights

EAU04121

Turn signal indicator lights " ⇦ " and " ⇨ "

The corresponding indicator light flashes when the turn signal switch is pushed to the left or right.

EAU04303

Fuel level warning light " ⛽ "

This warning light comes on when the fuel level drops below approximately 3.3 L. When this occurs, refuel as soon as possible

The electrical circuit of the warning light can be checked according to the following procedure.

1. Turn the key to "ON".
2. If the warning light does not come on for a few seconds, then go off, have a Yamaha dealer check the electrical circuit.

3

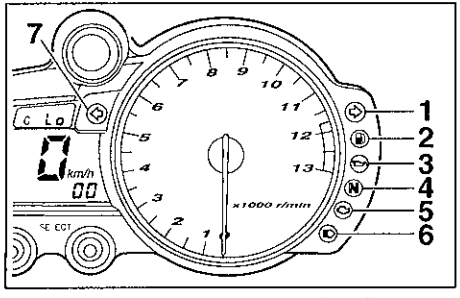

1 Right turn signal indicator light " ⇨ "
2 Fuel level warning light " "
3 Oil level warning light " "
4 Neutral indicator light "N"
5 Engine trouble warning light " "
6 High beam indicator light " "
7 Left turn signal indicator light " ⇦ "

EAU04301

Oil level warning light " "

This warning light comes on when the engine oil level is low.

The electrical circuit of the warning light can be checked according to the following procedure

1 Turn the key to "ON"
2 If the warning light does not come on for a few seconds, then go off, have a Yamaha dealer check the electrical circuit

NOTE:

Even if the oil level is sufficient, the warning light may flicker when riding on a slope or during sudden acceleration or deceleration, but this is not a malfunction

EAU00061

Neutral indicator light " N "

This indicator light comes on when the transmission is in the neutral position

EAU04514

Engine trouble warning light " "

This warning light comes on or flashes when an electrical circuit monitoring the engine is defective When this occurs, have a Yamaha dealer check the self-diagnosis system

NOTE:

This warning light comes on for a few seconds, then goes off when the key is turned to "ON", but this does not indicate a malfunction

EAU00063

High beam indicator light " "

This indicator light comes on when the high beam of the headlight is switched on

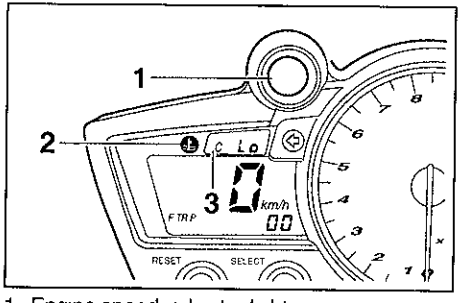

1 Engine speed indicator light
2 Coolant temperature warning light " E "
3 Coolant temperature display

EAU04559

Engine speed indicator light

The electrical circuit of the indicator light can be checked according to the following procedure

1 Turn the key to "ON".
2 If the indicator light does not come on for a few seconds, then go off, have a Yamaha dealer check the electrical circuit. (See pages 3-8–3-10 for a detailed explanation of the function of this indicator light and on how to set it)

EAU04515

Coolant temperature warning light " E "

This warning light comes on when the engine overheats When this occurs, stop the engine immediately and allow the engine to cool.

The electrical circuit of the warning light can be checked according to the following procedure

1 Turn the key to "ON"
2 If the warning light does not come on for a few seconds, then go off, have a Yamaha dealer check the electrical circuit

EC000002

CAUTION:

Do not operate the engine if it is overheated.

Coolant temperature	Display	Conditions	What to do
0–39 °C	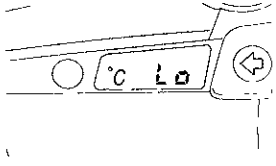	Message "LO" is displayed	OK Go ahead with riding
40–116 °C	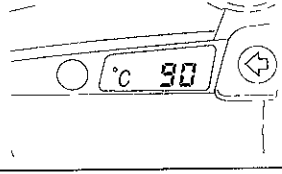	Temperature is displayed	OK Go ahead with riding
117–139 °C	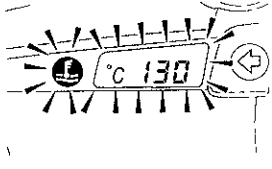	Temperature flashes Warning light comes on	Stop the motorcycle and allow it to idle until the coolant temperature goes down If the temperature does not go down, stop the engine (See the "Engine overheating" section on page 6-45 for further instructions)
Above 140 °C	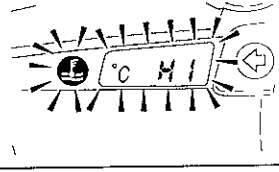	Message "HI" flashes Warning light comes on	Stop the engine and allow it to cool (See the "Engine overheating" section on page 6-45 for further instructions)

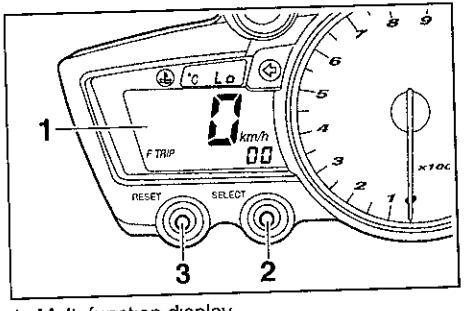

1 Multi-function display
2 "SELECT" button
3 "RESET" button

EAU04563

Multi-function display

The multi-function display is equipped with the following

- a speedometer (which shows the riding speed)
- an odometer (which shows the total distance traveled)
- two tripmeters (which show the distance traveled since they were last set to zero)
- a fuel reserve tripmeter (which shows the distance traveled since the fuel level warning light came on)
- a clock
- a self-diagnosis device
- a display brightness and engine speed indicator light control mode

NOTE:
Be sure to turn the key to "ON" before using the "SELECT" and "RESET" buttons.

Odometer and tripmeter modes

Pushing the "SELECT" button switches the display between the odometer mode "ODO" and the tripmeter modes "TRIP 1" and "TRIP 2" in the following order
ODO → TRIP 1 → TRIP 2 → ODO

If the fuel level warning light comes on (see page 3-2), the odometer display will automatically change to the fuel reserve tripmeter mode "F-TRIP" and start counting the distance traveled from that point In that case, pushing the "SELECT" button switches the display between the various tripmeter and odometer modes in the following order.
F-TRIP → TRIP 1 → TRIP 2 → ODO → F-TRIP

To reset a tripmeter, select it by pushing the "SELECT" button, and then push the "RESET" button for at least one second If you do not reset the fuel reserve tripmeter manually, it will reset itself automatically and the display will return to the prior mode after refueling and traveling 5 km

Clock mode

Turn the key to "ON"

To change the display to the clock mode, push the "SELECT" button for at least one second.

To change the display back to the prior mode, push the "SELECT" button

To set the clock.

1 Push the "SELECT" button and "RESET" button together for at least two seconds
2 When the hour digits start flashing, push the "RESET" button to set the hours
3 Push the "SELECT" button, and the minute digits will start flashing
4 Push the "RESET" button to set the minutes
5 Push the "SELECT" button and then release it to start the clock

Self-diagnosis device

This model is equipped with a self-diagnosis device for various electrical circuits

If any of those circuits are defective, the engine trouble warning light will come on, and then the multi-function display will indicate a two-digit error code (e g , 11, 12, 13)

If the multi-function display indicates such an error code, note the code number, and then have a Yamaha dealer check the motorcycle

ECA00127

CAUTION:

If the display indicates an error code, the motorcycle should be checked as soon as possible in order to avoid engine damage.

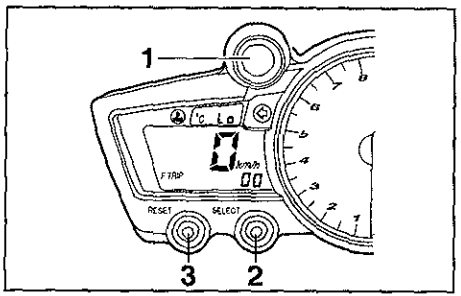

1 Engine speed indicator light
2 "SELECT" button
3 "RESET" button

Display brightness and engine speed indicator light control mode

This mode cycles through five control functions, allowing you to make the following settings in the order listed below.

1. Display brightness: This function allows you to adjust the brightness of the multi-function display to suit the outside lighting conditions.
2. Engine speed indicator light activity: This function allows you to choose whether or not the indicator light should be activated and whether it should blink or stay on when activated.
3. Engine speed indicator light activation: This function allows you to select the engine speed at which the indicator light will be activated.
4. Engine speed indicator light deactivation: This function allows you to select the engine speed at which the indicator light will be deactivated
5. Engine speed indicator light brightness: This function allows you to adjust the brightness of the indicator light to suit your preference

NOTE:

- To make any settings in this mode, you have to cycle through all of its functions. However, if the key is turned to "OFF" or the engine is started before completing the procedure, only the settings made before the "SELECT" button was last pushed will be applied
- In this mode, the multi-function display shows the current setting for each function (except the engine speed indicator light activity function).

To adjust the display brightness

1. Turn the key to "OFF"
2. Push and hold the "SELECT" button.
3. Turn the key to "ON", and then, after five seconds, release the "SELECT" button
4. Push the "RESET" button to select the desired display brightness level
5. Push the "SELECT" button to confirm the selected display brightness level The control mode changes to the engine speed indicator light activity function

To set the engine speed indicator light activity function

1. Push the "RESET" button to select one of the following indicator light activity settings
   a. The indicator light will stay on when activated (This setting is selected when the indicator light stays on)
   b. The indicator light will flash when activated (This setting is selected when the indicator light flashes four times per second)
   c. The indicator light is deactivated, in other words, it will not come on or flash (This setting is selected when the indicator light flashes once every two seconds.)
2. Push the "SELECT" button to confirm the selected indicator light activity The control mode changes to the engine speed indicator light activation function

To set the engine speed indicator light activation function

NOTE:
The indicator light activation function can be set between 7,000 and 12,000 r/min in increments of 500 r/min

1. Push the "RESET" button to select the desired engine speed for activating the indicator light
2. Push the "SELECT" button to confirm the selected engine speed The control mode changes to the engine speed indicator light deactivation function

To set the engine speed indicator light deactivation function

NOTE:

- The indicator light deactivation function can be set between 7,000 and 12,000 r/min in increments of 500 r/min
- Be sure to set the deactivation function to a higher engine speed than for the activation function, otherwise the engine speed indicator light will remain deactivated.

1. Push the "RESET" button to select the desired engine speed for deactivating the indicator light
2. Push the "SELECT" button to confirm the selected engine speed The control mode changes to the engine speed indicator light brightness function

To adjust the engine speed indicator light brightness

1. Push the "RESET" button to select the desired indicator light brightness level
2. Push the "SELECT" button to confirm the selected indicator light brightness level. The multi-function display will return to the odometer, tripmeter or clock mode.

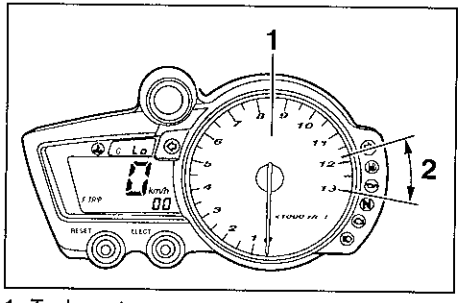

1 Tachometer
2 Tachometer red zone

EAU00101

Tachometer

The electric tachometer allows the rider to monitor the engine speed and keep it within the ideal power range

EC000003

CAUTION:

Do not operate the engine in the tachometer red zone.
Red zone: 11,750 r/min and above

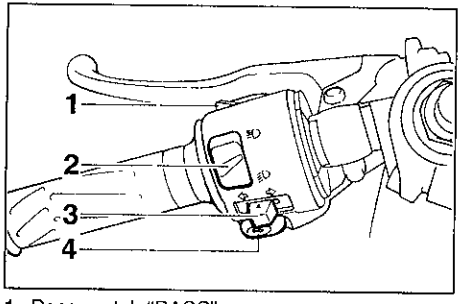

1 Pass switch "PASS"
2 Dimmer switch "≡D / ≡D"
3 Turn signal switch " ⇦ / ⇨ "
4 Horn switch " 📯 "

EAU00118

Handlebar switches

EAU04553

Pass switch "PASS"

Press this switch to flash the headlights

EAU03888

Dimmer switch "≡D / ≡D"

Set this switch to "≡D" for the high beam and to "≡D" for the low beam.

EAU03889

Turn signal switch " ⇦ / ⇨ "

To signal a right-hand turn, push this switch to "⇨" To signal a left-hand turn, push this switch to "⇦". When released, the switch returns to the center position To cancel the turn signal lights, push the switch in after it has returned to the center position

EAU00129

Horn switch " 📯 "

Press this switch to sound the horn

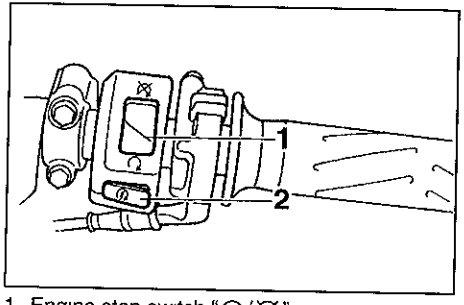

1 Engine stop switch "○/⊗"
2 Start switch "⊛"

EAU03890

Engine stop switch "○/⊗"

Set this switch to "○" before starting the engine Set this switch to "⊗" to stop the engine in case of an emergency, such as when the motorcycle overturns or when the throttle cable is stuck

EAU00143

Start switch "⊛"

Push this switch to crank the engine with the starter.

EC000005

CAUTION:

See page 5-1 for starting instructions prior to starting the engine.

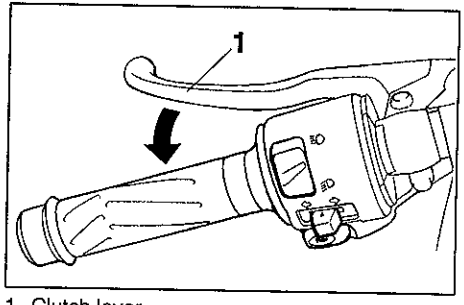

1 Clutch lever

EAU00152

Clutch lever

The clutch lever is located at the left handlebar grip. To disengage the clutch, pull the lever toward the handlebar grip. To engage the clutch, release the lever The lever should be pulled rapidly and released slowly for smooth clutch operation.

The clutch lever is equipped with a clutch switch, which is part of the ignition circuit cut-off system (See page 3-24 for an explanation of the ignition circuit cut-off system.)

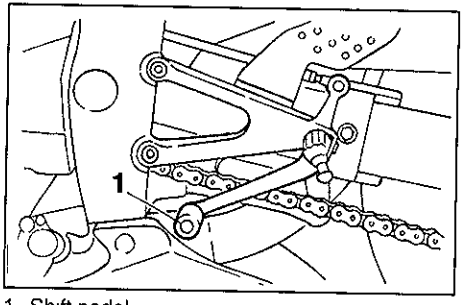

1 Shift pedal

EAU00157

Shift pedal

The shift pedal is located on the left side of the engine and is used in combination with the clutch lever when shifting the gears of the 6-speed constant-mesh transmission equipped on this motorcycle.

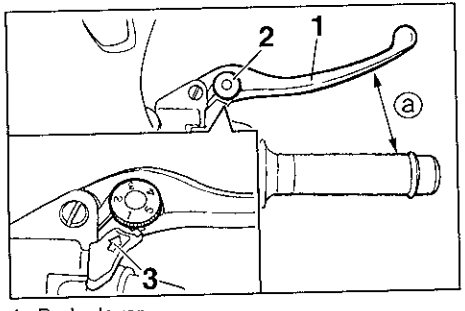

1 Brake lever
2 Brake lever position adjusting dial
3 Arrow mark
a Distance between brake lever and handlebar grip

EAU00161

Brake lever

The brake lever is located at the right handlebar grip To apply the front brake, pull the lever toward the handlebar grip The brake lever is equipped with a position adjusting dial To adjust the distance between the brake lever and the handlebar grip, turn the adjusting dial while holding the lever pushed away from the handlebar grip Make sure that the appropriate setting on the adjusting dial is aligned with the arrow mark on the brake lever

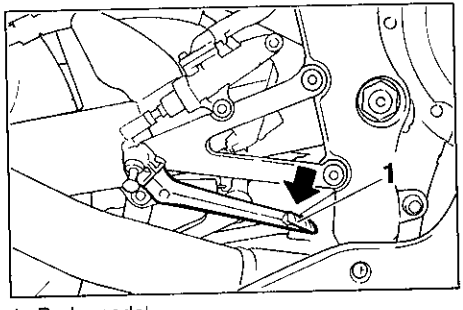

1 Brake pedal

EAU00162

Brake pedal

The brake pedal is on the right side of the motorcycle To apply the rear brake, press down on the brake pedal.

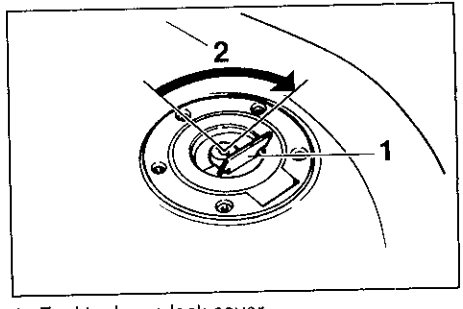

1 Fuel tank cap lock cover
2 Unlock

EAU04068

Fuel tank cap

To open the fuel tank cap

Open the fuel tank cap lock cover, insert the key into the lock, and then turn it 1/4 turn clockwise The lock will be released and the fuel tank cap can be opened

To close the fuel tank cap

1 Push the fuel tank cap into position with the key inserted in the lock
2 Remove the key, and then close the lock cover

NOTE:

The fuel tank cap cannot be closed unless the key is in the lock. In addition, the key cannot be removed if the cap is not properly closed and locked

EWA00025

WARNING

Make sure that the fuel tank cap is properly closed before riding.

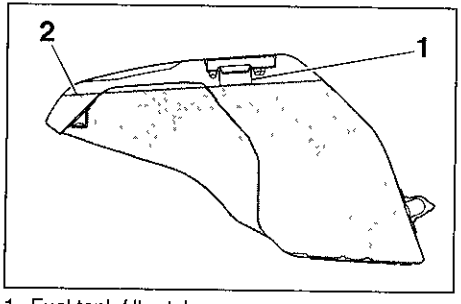

1 Fuel tank filler tube
2 Fuel level

EAU03753

Fuel

Make sure that there is sufficient fuel in the tank Fill the fuel tank to the bottom of the filler tube as shown

EW000130

WARNING

- **Do not overfill the fuel tank, otherwise it may overflow when the fuel warms up and expands.**
- **Avoid spilling fuel on the hot engine.**

EAU00185

CAUTION:

Immediately wipe off spilled fuel with a clean, dry, soft cloth, since fuel may deteriorate painted surfaces or plastic parts.

EAU04516

Recommended fuel
PREMIUM UNLEADED
GASOLINE ONLY
Fuel tank capacity
Total amount
17 L
Amount remaining when the fuel level warning light comes on
3 3 L

ECA00104

CAUTION:

Use only unleaded gasoline. The use of leaded gasoline will cause severe damage to internal engine parts, such as the valves and piston rings, as well as to the exhaust system.

Your Yamaha engine has been designed to use regular unleaded gasoline with a research octane number of 95 or higher If knocking (or pinging) occurs, use a gasoline of a different brand or premium unleaded fuel Use of unleaded fuel will extend spark plug life and reduce maintenance costs.

EAU03098*

Catalytic converter

This motorcycle is equipped with a catalytic converter in the muffler.

EW000128

WARNING

The exhaust system is hot after operation. Make sure that the exhaust system has cooled down before doing any maintenance work.

EC000114

CAUTION:

The following precautions must be observed to prevent a fire hazard or other damages.

- **Use only unleaded gasoline. The use of leaded gasoline will cause unrepairable damage to the catalytic converter.**
- **Never park the motorcycle near possible fire hazards such as grass or other materials that easily burn.**
- **Do not allow the engine to idle too long.**

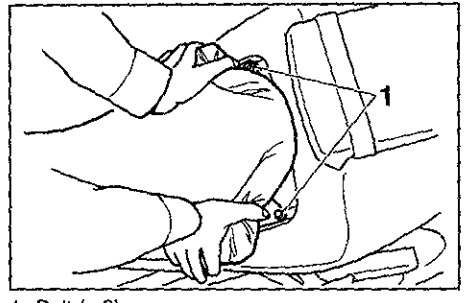

1 Bolt (× 2)

EAU04493

Seats

Rider seat

To remove the rider seat

Pull up the rear corners of the rider seat as shown, remove the bolts, and then pull the seat off

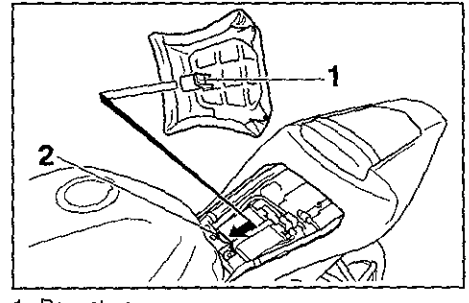

1. Projection
2 Seat holder

To install the rider seat

Insert the projection on the front of the rider seat into the seat holder as shown, place the seat in the original position, and then install the bolts

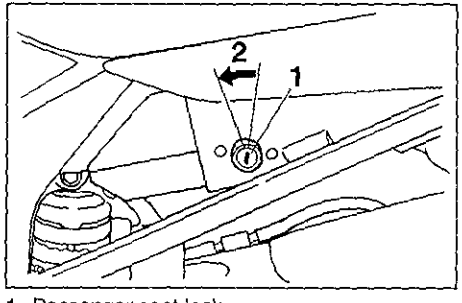

1. Passenger seat lock
2 Unlock

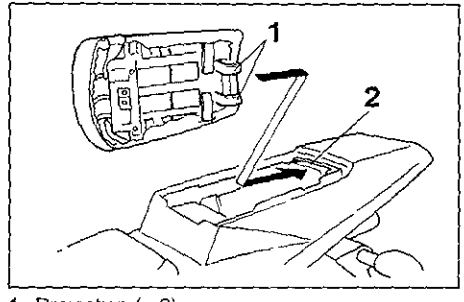

1 Projection (× 2)
2 Seat holder

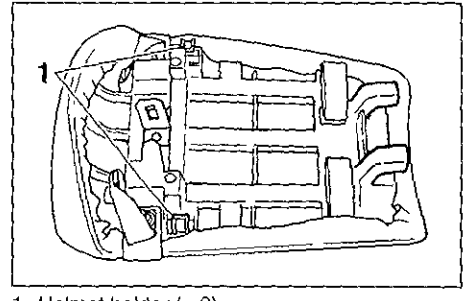

1 Helmet holder (× 2)

EAU04489*

Passenger seat

To remove the passenger seat

1 Insert the key into the seat lock, and then turn it counterclockwise
2 While holding the key in that position, lift the front of the passenger seat and pull it forward

To install the passenger seat

1 Insert the projections on the rear of the passenger seat into the seat holder as shown, and then push the front of the seat down to lock it in place
2 Remove the key

NOTE:
Make sure that the seats are properly secured before riding

Helmet holders

The helmet holders are located on the bottom of the passenger seat

To secure a helmet to a helmet holder

1 Remove the passenger seat
2 Attach the helmet to a helmet holder, and then securely install the passenger seat.

EWA00015

WARNING

Never ride with a helmet attached to a helmet holder, since the helmet may hit objects, causing loss of control and possibly an accident.

ECA00128

CAUTION:

Some helmets may contact the muffler when secured to the right side helmet holder because of their size or shape. Be sure that your helmet does not contact the muffler when it is secured to the helmet holder.

To release a helmet from a helmet holder

Remove the passenger seat, remove the helmet from the helmet holder, and then install the seat

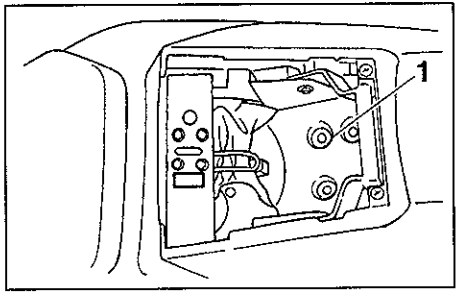

1 Storage compartment

EAU01242

Storage compartment

The storage compartment is located under the passenger seat (See page 3-17 for passenger seat removal and installation procedures)

EWA00005

WARNING

- **Do not exceed the load limit of 3 kg for the storage compartment.**
- **Do not exceed the maximum load of 202 kg for the vehicle.**

EAU01862

Adjusting the front fork

This front fork is equipped with spring preload adjusting bolts, rebound damping force adjusting screws and compression damping force adjusting screws

EW000035

WARNING

Always adjust both fork legs equally, otherwise poor handling and loss of stability may result.

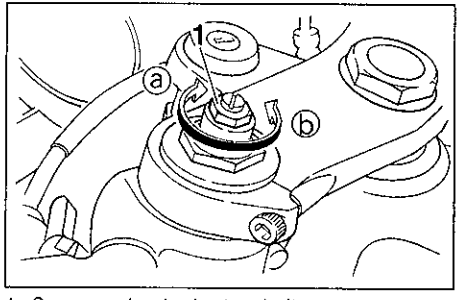

1 Spring preload adjusting bolt

Spring preload

To increase the spring preload and thereby harden the suspension, turn the adjusting bolt on each fork leg in direction ⓐ To decrease the spring preload and thereby soften the suspension, turn the adjusting bolt on each fork leg in direction ⓑ

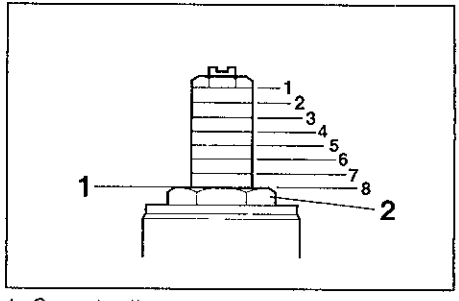

1 Current setting
2 Front fork cap bolt

NOTE:

Align the appropriate groove on the adjusting mechanism with the top of the front fork cap bolt

	Setting
Minimum (soft)	8
Standard	6
Maximum (hard)	1

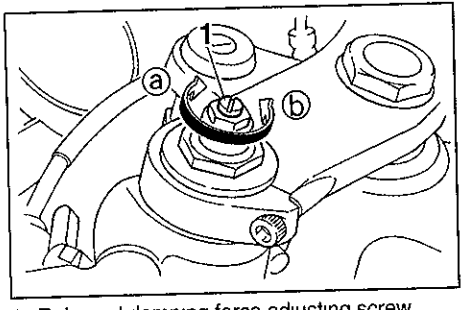

1 Rebound damping force adjusting screw

Rebound damping force

To increase the rebound damping force and thereby harden the rebound damping, turn the adjusting screw on each fork leg in direction ⓐ To decrease the rebound damping force and thereby soften the rebound damping, turn the adjusting screw on each fork leg in direction ⓑ.

Minimum (soft)	26 clicks in direction ⓑ*
Standard	13 clicks in direction ⓑ*
Maximum (hard)	1 click in direction ⓑ*

* With the adjusting screw fully turned in direction ⓐ

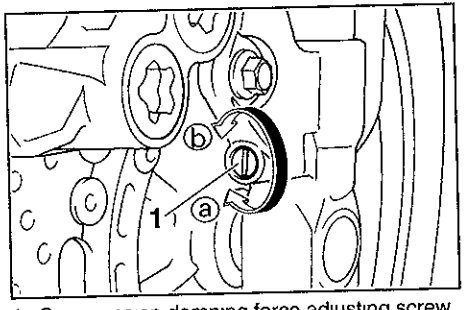

1 Compression damping force adjusting screw

Compression damping force

To increase the compression damping force and thereby harden the compression damping, turn the adjusting screw on each fork leg in direction ⓐ. To decrease the compression damping force and thereby soften the compression damping, turn the adjusting screw on each fork leg in direction ⓑ.

Minimum (soft)	20 clicks in direction ⓑ*
Standard	13 clicks in direction ⓑ*
Maximum (hard)	1 click in direction ⓑ*

* With the adjusting screw fully turned in direction ⓐ

EC000015

CAUTION:

Never attempt to turn an adjusting mechanism beyond the maximum or minimum settings.

NOTE:

Although the total number of clicks of a damping force adjusting mechanism may not exactly match the above specifications due to small differences in production, the actual number of clicks always represents the entire adjusting range. To obtain a precise adjustment, it would be advisable to check the number of clicks of each damping force adjusting mechanism and to modify the specifications as necessary

3

EAU04496

Adjusting the shock absorber assembly

This shock absorber assembly is equipped with a spring preload adjusting ring and rebound and compression damping force adjusting screws

EC000015

CAUTION:

Never attempt to turn an adjusting mechanism beyond the maximum or minimum settings.

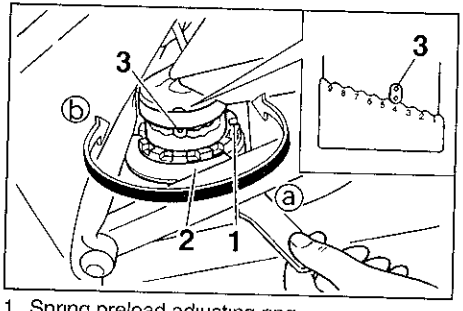

1 Spring preload adjusting ring
2 Special wrench
3 Position indicator

Spring preload

To increase the spring preload and thereby harden the suspension, turn the adjusting ring in direction ⓐ To decrease the spring preload and thereby soften the suspension, turn the adjusting ring in direction ⓑ

NOTE:

- Align the appropriate notch in the adjusting ring with the position indicator on the shock absorber
- Use the special wrench included in the owner's tool kit to make the adjustment

	Setting
Minimum (soft)	1
Standard	4
Maximum (hard)	9

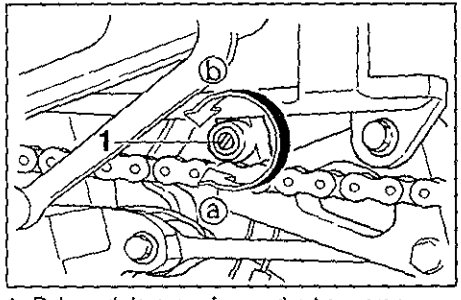

1 Rebound damping force adjusting screw

Rebound damping force

To increase the rebound damping force and thereby harden the rebound damping, turn the adjusting screw in direction ⓐ. To decrease the rebound damping force and thereby soften the rebound damping, turn the adjusting screw in direction ⓑ.

Minimum (soft)	20 clicks in direction ⓑ*
Standard	15 clicks in direction ⓑ*
Maximum (hard)	1 click in direction ⓑ*

* With the adjusting screw fully turned in direction ⓐ

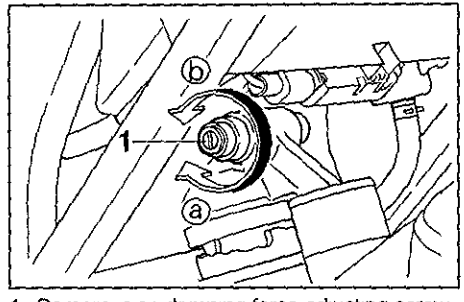

1 Compression damping force adjusting screw

Compression damping force

To increase the compression damping force and thereby harden the compression damping, turn the adjusting screw in direction ⓐ. To decrease the compression damping force and thereby soften the compression damping, turn the adjusting screw in direction ⓑ.

Minimum (soft)	20 clicks in direction ⓑ*
Standard	15 clicks in direction ⓑ*
Maximum (hard)	1 click in direction ⓑ*

* With the adjusting screw fully turned in direction ⓐ

NOTE:

Although the total number of clicks of a damping force adjusting mechanism may not exactly match the above specifications due to small differences in production, the actual number of clicks always represents the entire adjusting range To obtain a precise adjustment, it would be advisable to check the number of clicks of each damping force adjusting mechanism and to modify the specifications as necessary

EAU00315

WARNING

This shock absorber contains highly pressurized nitrogen gas. For proper handling, read and understand the following information before handling the shock absorber. The manufacturer cannot be held responsible for property damage or personal injury that may result from improper handling.

- **Do not tamper with or attempt to open the gas cylinder.**
- **Do not subject the shock absorber to an open flame or other high heat sources, otherwise it may explode due to excessive gas pressure.**
- **Do not deform or damage the gas cylinder in any way, as this will result in poor damping performance.**
- **Always have a Yamaha dealer service the shock absorber.**

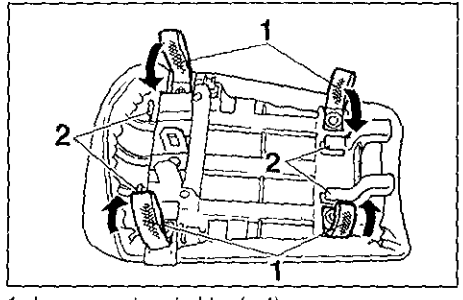

1 Luggage strap holder (× 4)
2 Hook (× 4)

EAU03170

Luggage strap holders

There are four luggage strap holders on the bottom of the passenger seat To use the strap holders, remove the passenger seat, unhook the straps, and then install the seat with the straps hanging out from under the passenger seat. (See page 3-17 for passenger seat removal and installation procedures.)

EAU01571

EXUP system

This motorcycle is equipped with Yamaha's EXUP (EXhaust Ultimate Power valve) system This system boosts engine power by means of a valve that regulates the diameter of the exhaust pipe The EXUP system valve is constantly adjusted in accordance with the engine speed by a computer-controlled servomotor

EC000027

CAUTION:

- **The EXUP system has been set and extensively tested at the Yamaha factory. Changing these settings without sufficient technical knowledge may result in poor performance of or damage to the engine.**
- **If the EXUP system does not operate, have a Yamaha dealer check it.**

EAU00330

Sidestand

The sidestand is located on the left side of the frame. Raise the sidestand or lower it with your foot while holding the motorcycle upright

NOTE:

The built-in sidestand switch is part of the ignition circuit cut-off system, which cuts the ignition in certain situations (See further down for an explanation of the ignition circuit cut-off system.)

EW000044

WARNING

The motorcycle must not be ridden with the sidestand down, or if the sidestand cannot be properly moved up (or does not stay up), otherwise the sidestand could contact the ground and distract the operator, resulting in a possible loss of control. Yamaha's ignition circuit cut-off system has been designed to assist the operator in fulfilling the responsibility of raising the sidestand before starting off. Therefore, check this system regularly as described below and have a Yamaha dealer repair it if it does not function properly.

EAU03720

Ignition circuit cut-off system

The ignition circuit cut-off system (comprising the sidestand switch, clutch switch and neutral switch) has the following functions

- It prevents starting when the transmission is in gear and the sidestand is up, but the clutch lever is not pulled.
- It prevents starting when the transmission is in gear and the clutch lever is pulled, but the sidestand is still down
- It cuts the running engine when the transmission is in gear and the sidestand is moved down

Periodically check the operation of the ignition circuit cut-off system according to the following procedure

EW000045

WARNING

If a malfunction is noted, have a Yamaha dealer check the system before riding.

NOTE:
This check is most reliable if performed with a warmed-up engine

With the engine turned off
1 Move the sidestand down
2 Make sure that the engine stop switch is set to "○"
3 Turn the key to "ON"
4 Shift the transmission into the neutral position
5 Push the start switch
Does the engine start?

YES → With the engine still running

NO → The neutral switch may be defective
The motorcycle should not be ridden until checked by a Yamaha dealer

With the engine still running
6 Move the sidestand up
7 Keep the clutch lever pulled
8 Shift the transmission into gear
9 Move the sidestand down
Does the engine stall?

YES → After the engine has stalled

NO → The sidestand switch may be defective
The motorcycle should not be ridden until checked by a Yamaha dealer

After the engine has stalled
10 Move the sidestand up
11 Keep the clutch lever pulled
12 Push the start switch
Does the engine start?

YES → The system is OK **The motorcycle can be ridden.**

NO → The clutch switch may be defective
The motorcycle should not be ridden until checked by a Yamaha dealer

PRE-OPERATION CHECKS

Pre-operation check list 4-1

PRE-OPERATION CHECKS

EAU01114

The condition of a vehicle is the owner's responsibility Vital components can start to deteriorate quickly and unexpectedly, even if the vehicle remains unused (for example, as a result of exposure to the elements) Any damage, fluid leakage or loss of tire air pressure could have serious consequences Therefore, it is very important, in addition to a thorough visual inspection, to check the following points before each ride

EAU03439

Pre-operation check list

ITEM	CHECKS	PAGE
Fuel	• Check fuel level in fuel tank • Refuel if necessary • Check fuel line for leakage	3-15
Engine oil	• Check oil level in engine • If necessary, add recommended oil to specified level • Check vehicle for oil leakage	6-9
Coolant	• Check coolant level in reservoir • If necessary, add recommended coolant to specified level • Check cooling system for leakage	6-12–6-13
Front brake	• Check operation • If soft or spongy, have Yamaha dealer bleed hydraulic system • Check fluid level in reservoir • If necessary, add recommended brake fluid to specified level • Check hydraulic system for leakage	6-25–6-27
Rear brake	• Check operation • If soft or spongy, have Yamaha dealer bleed hydraulic system • Check fluid level in reservoir • If necessary, add recommended brake fluid to specified level • Check hydraulic system for leakage	6-24–6-27
Clutch	• Check operation • Lubricate cable if necessary • Check lever free play • Adjust if necessary	6-23
Throttle grip	• Make sure that operation is smooth • Check cable free play • If necessary, have Yamaha dealer adjust cable free play and lubricate cable and grip housing.	6-19, 6-30

ITEM	CHECKS	PAGE
Control cables	• Make sure that operation is smooth. • Lubricate if necessary	6-29
Drive chain	• Check chain slack • Adjust if necessary • Check chain condition • Lubricate if necessary	6-27–6-28
Wheels and tires	• Check for damage • Check tire condition and tread depth • Check air pressure • Correct if necessary	6-19–6-22
Shift pedal	• Make sure that operation is smooth • Correct if necessary	—
Brake pedal	• Make sure that operation is smooth • Lubricate pedal pivoting point if necessary	6-31
Brake and clutch levers	• Make sure that operation is smooth • Lubricate lever pivoting points if necessary	6-30
Sidestand	• Make sure that operation is smooth • Lubricate pivot if necessary	6-31
Chassis fasteners	• Make sure that all nuts, bolts and screws are properly tightened • Tighten if necessary	—
Instruments, lights, signals and switches	• Check operation • Correct if necessary	—
Sidestand switch	• Check operation of ignition circuit cut-off system • If system is defective, have Yamaha dealer check vehicle	3-25

PRE-OPERATION CHECKS

NOTE:

Pre-operation checks should be made each time the motorcycle is used Such an inspection can be accomplished in a very short time, and the added safety it assures is more than worth the time involved

⚠ WARNING EWA00033

If any item in the Pre-operation check list is not working properly, have it inspected and repaired before operating the motorcycle.

4

OPERATION AND IMPORTANT RIDING POINTS

Starting and warming up a cold engine 5-1
Shifting 5-2
Tips for reducing fuel consumption 5-3
Engine break-in 5-3
Parking 5-4

OPERATION AND IMPORTANT RIDING POINTS

EAU00373

WARNING

- **Become thoroughly familiar with all operating controls and their functions before riding. Consult a Yamaha dealer regarding any control or function that you do not thoroughly understand.**
- **Never start the engine or operate it in a closed area for any length of time. Exhaust fumes are poisonous, and inhaling them can cause loss of consciousness and death within a short time. Always make sure that there is adequate ventilation.**
- **Before starting out, make sure that the sidestand is up. If the sidestand is not raised completely, it could contact the ground and distract the operator, resulting in a possible loss of control.**

EAU04564

Starting and warming up a cold engine

In order for the ignition circuit cut-off system to enable starting, one of the following conditions must be met

- The transmission is in the neutral position
- The transmission is in gear with the clutch lever pulled and the sidestand up

EW000054

WARNING

- **Before starting the engine, check the function of the ignition circuit cut-off system according to the procedure described on page 3-25.**
- **Never ride with the sidestand down.**

1 Turn the key to "ON" and make sure that the engine stop switch is set to "○"

ECA00132

CAUTION:

The following warning lights and indicator light should come on for a few seconds, then go off.

- **Oil level warning light**
- **Fuel level warning light**
- **Coolant temperature warning light**
- **Engine speed indicator light**
- **Engine trouble warning light**

If a warning or indicator light does not go off, see pages 3-2–3-5 for the corresponding warning and indicator light circuit check.

2 Shift the transmission into the neutral position

NOTE:

When the transmission is in the neutral position, the neutral indicator light should be on, otherwise have a Yamaha dealer check the electrical circuit

3 Start the engine by pushing the start switch

NOTE:
If the engine fails to start, release the start switch, wait a few seconds, and then try again. Each starting attempt should be as short as possible to preserve the battery Do not crank the engine more than 10 seconds on any one attempt.

ECA00055

CAUTION:
For maximum engine life, always warm the engine up before starting off. Never accelerate hard when the engine is cold!

NOTE:
The engine is warm when it quickly responds to the throttle.

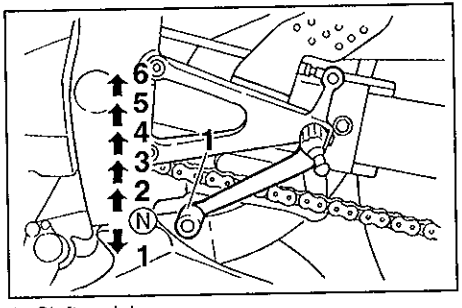

1 Shift pedal
N Neutral position

EAU00423

Shifting

Shifting gears lets you control the amount of engine power available for starting off, accelerating, climbing hills, etc.
The gear positions are shown in the illustration.

NOTE:
To shift the transmission into the neutral position, press the shift pedal down repeatedly until it reaches the end of its travel, and then slightly raise it.

EC000048

CAUTION:
- **Even with the transmission in the neutral position, do not coast for long periods of time with the engine off, and do not tow the motorcycle for long distances. The transmission is properly lubricated only when the engine is running. Inadequate lubrication may damage the transmission.**
- **Always use the clutch while changing gears to avoid damaging the engine, transmission, and drive train, which are not designed to withstand the shock of forced shifting.**

EAU03952

Tips for reducing fuel consumption

Fuel consumption depends largely on your riding style Consider the following tips to reduce fuel consumption

- Thoroughly warm up the engine
- Shift up swiftly, and avoid high engine speeds during acceleration
- Do not rev the engine while shifting down, and avoid high engine speeds with no load on the engine
- Turn the engine off instead of letting it idle for an extended length of time (e g , in traffic jams, at traffic lights or at railroad crossings)

EAU01128

Engine break-in

There is never a more important period in the life of your engine than the period between 0 and 1,600 km For this reason, you should read the following material carefully

Since the engine is brand new, do not put an excessive load on it for the first 1,600 km The various parts in the engine wear and polish themselves to the correct operating clearances. During this period, prolonged full-throttle operation or any condition that might result in engine overheating must be avoided

EAU03172

0–1,000 km

Avoid prolonged operation above 6,000 r/min

1,000–1,600 km

Avoid prolonged operation above 7,000 r/min

EC000052

CAUTION:

After 1,000 km of operation, the engine oil must be changed and the oil filter cartridge replaced.

1,600 km and beyond

The vehicle can now be operated normally

EC000053

CAUTION:

- **Keep the engine speed out of the tachometer red zone.**
- **If any engine trouble should occur during the engine break-in period, immediately have a Yamaha dealer check the vehicle.**

NOTE:

During and after the engine break-in period, the exhaust heat may cause discoloration of the exhaust pipe, but this is normal

EAU00461

Parking

When parking, stop the engine, and then remove the key from the main switch

EW000058

WARNING

- **Since the engine and exhaust system can become very hot, park in a place where pedestrians or children are not likely to touch them.**
- **Do not park on a slope or on soft ground, otherwise the motorcycle may overturn.**

EC000062

CAUTION:

Never park in an area where there are fire hazards such as grass or other flammable materials.

PERIODIC MAINTENANCE AND MINOR REPAIR

Owner's tool kit 6-1
Periodic maintenance and lubrication chart 6-2
Removing and installing cowlings and panels 6-5
Checking the spark plugs 6-8
Engine oil and oil filter cartridge 6-9
Coolant 6-12
Replacing the air filter element 6-16
Adjusting the engine idling speed 6-18
Adjusting the throttle cable free play 6-19
Adjusting the valve clearance 6-19
Tires 6-19
Cast wheels 6-22
Adjusting the clutch lever free play 6-23
Adjusting the brake pedal position 6-24
Adjusting the rear brake light switch 6-24
Checking the front and rear brake pads 6-25
Checking the brake fluid level 6-26
Changing the brake fluid 6-27
Drive chain slack 6-27
Lubricating the drive chain 6-29
Checking and lubricating the cables 6-29
Checking and lubricating the throttle grip and cable 6-30
Checking and lubricating the brake and clutch levers 6-30
Lubricating the brake pedal 6-31
Checking and lubricating the sidestand 6-31
Checking the front fork 6-31
Checking the steering 6-32
Checking the wheel bearings 6-33
Battery 6-33
Replacing the fuses 6-35
Replacing a headlight bulb 6-36
Tail/brake light 6-37
Replacing a turn signal light bulb 6-37
Replacing the license plate light bulb 6-38
Supporting the motorcycle 6-39
Front wheel 6-39
Rear wheel 6-41
Troubleshooting 6-43
Troubleshooting charts 6-44

PERIODIC MAINTENANCE AND MINOR REPAIR

EAU00462

EAU00464

Safety is an obligation of the owner Periodic inspection, adjustment and lubrication will keep your vehicle in the safest and most efficient condition possible The most important points of inspection, adjustment, and lubrication are explained on the following pages The intervals given in the periodic maintenance and lubrication chart should be simply considered as a general guide under normal riding conditions However, DEPENDING ON THE WEATHER, TERRAIN, GEOGRAPHICAL LOCATION, AND INDIVIDUAL USE, THE MAINTENANCE INTERVALS MAY NEED TO BE SHORTENED

EW000060

WARNING

If you are not familiar with motorcycle maintenance work, have a Yamaha dealer do it for you.

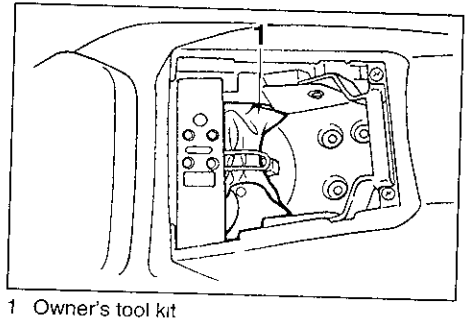

1 Owner's tool kit

EAU04223

Owner's tool kit

The owner's tool kit is located inside the storage compartment under the passenger seat (See page 3-17 for passenger seat removal and installation procedures)

The service information included in this manual and the tools provided in the owner's tool kit are intended to assist you in the performance of preventive maintenance and minor repairs However, additional tools such as a torque wrench may be necessary to perform certain maintenance work correctly

NOTE:

If you do not have the tools or experience required for a particular job, have a Yamaha dealer perform it for you

EW000063

WARNING

Modifications not approved by Yamaha may cause loss of performance and render the vehicle unsafe for use. Consult a Yamaha dealer before attempting any changes.

6

Periodic maintenance and lubrication chart

EAU03685

NOTE:

- **The annual checks must be performed every year, except if a kilometer-based maintenance is performed instead.**
- From 50,000 km, repeat the maintenance intervals starting from 10,000 km
- Items marked with an asterisk should be performed by a Yamaha dealer as they require special tools, data and technical skills

NO		ITEM	CHECK OR MAINTENANCE JOB	ODOMETER READING (× 1,000 km)					ANNUAL CHECK
				1	10	20	30	40	
1	*	**Fuel line**	• Check fuel hoses for cracks or damage		√	√	√	√	√
2	*	**Spark plugs**	• Check condition • Clean and regap		√		√		
			• Replace			√		√	
3	*	**Valves**	• Check valve clearance. • Adjust	Every 40,000 km					
4		**Air filter element**	• Replace					√	
5		**Clutch**	• Check operation • Adjust	√	√	√	√	√	
6	*	**Front brake**	• Check operation, fluid level and vehicle for fluid leakage (See NOTE on page 6-4)	√	√	√	√	√	√
			• Replace brake pads	Whenever worn to the limit					
7	*	**Rear brake**	• Check operation, fluid level and vehicle for fluid leakage (See NOTE on page 6-4)	√	√	√	√	√	√
			• Replace brake pads	Whenever worn to the limit					
8	*	**Brake hoses**	• Check for cracks or damage		√	√	√	√	√
			• Replace (See NOTE on page 6-4)	Every 4 years					
9	*	**Wheels**	• Check runout and for damage		√	√	√	√	

6

NO		ITEM	CHECK OR MAINTENANCE JOB	ODOMETER READING (× 1,000 km)					ANNUAL CHECK
				1	10	20	30	40	
10	*	Tires	• Check tread depth and for damage • Replace if necessary • Check air pressure • Correct if necessary		√	√	√	√	√
11	*	Wheel bearings	• Check bearing for looseness or damage		√	√	√	√	
12	*	Swingarm	• Check operation and for excessive play		√	√	√	√	
			• Lubricate with lithium-soap-based grease	Every 50,000 km					
13		Drive chain	• Check chain slack • Make sure that the rear wheel is properly aligned • Clean and lubricate	Every 1,000 km and after washing the motorcycle or riding in the rain					
14	*	Steering bearings	• Check bearing play and steering for roughness	√	√	√	√	√	
			• Lubricate with lithium-soap-based grease	Every 20,000 km					
15	*	Chassis fasteners	• Make sure that all nuts, bolts and screws are properly tightened		√	√	√	√	√
16		Sidestand	• Check operation • Lubricate		√	√	√	√	√
17	*	Sidestand switch	• Check operation	√	√	√	√	√	√
18	*	Front fork	• Check operation and for oil leakage		√	√	√	√	
19	*	Shock absorber assembly	• Check operation and shock absorber for oil leakage		√	√	√	√	
20	*	Rear suspension relay arm and connecting arm pivoting points	• Check operation		√	√	√	√	
21	*	Electronic fuel injection	• Adjust engine idling speed and synchronization	√	√	√	√	√	√
22		Engine oil	• Change • Check oil level and vehicle for oil leakage	√	√	√	√	√	√
23		Engine oil filter cartridge	• Replace	√		√		√	
24	*	Cooling system	• Check coolant level and vehicle for coolant leakage		√	√	√	√	√
			• Change	Every 3 years					

NO.		ITEM	CHECK OR MAINTENANCE JOB	ODOMETER READING (× 1,000 km)					ANNUAL CHECK
				1	10	20	30	40	
25	*	**Front and rear brake switches**	• Check operation	√	√	√	√	√	√
26		**Moving parts and cables**	• Lubricate		√	√	√	√	√
27	*	**Throttle grip housing and cable**	• Check operation and free play • Adjust the throttle cable free play if necessary • Lubricate the throttle grip housing and cable		√	√	√	√	√
28	*	**Air induction system**	• Check the air cut-off valve, reed valve, and hose for damage • Replace any damaged parts if necessary		√	√	√	√	√
29	*	**Muffler and exhaust pipe**	• Check the screw clamp for looseness	√	√	√	√	√	
30	*	**Lights, signals and switches**	• Check operation • Adjust headlight beam	√	√	√	√	√	√

EAU04522

NOTE:

- Air filter
  - This model's air filter is equipped with a disposable oil-coated paper element, which must not be cleaned with compressed air to avoid damaging it.
  - The air filter element needs to be replaced more frequently when riding in unusually wet or dusty areas.
- Hydraulic brake service
  - Regularly check and, if necessary, correct the brake fluid level
  - Every two years replace the internal components of the brake master cylinders and calipers, and change the brake fluid
  - Replace the brake hoses every four years and if cracked or damaged.

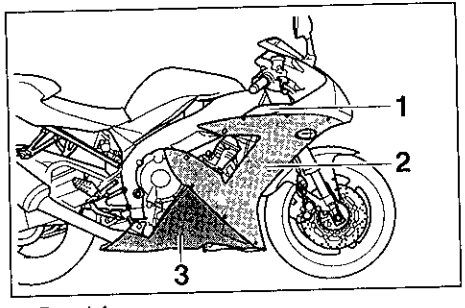

1 Panel A
2 Cowling A
3 Cowling B

EAU01139

Removing and installing cowlings and panels

The cowlings and panels shown above need to be removed to perform some of the maintenance jobs described in this chapter Refer to this section each time a cowling or panel needs to be removed and installed

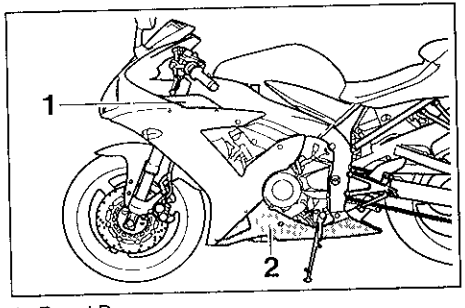

1 Panel B
2 Cowling B

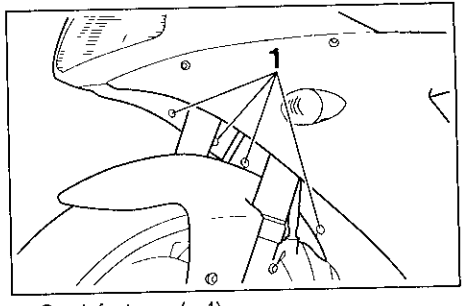

1 Quick fastener (× 4)

EAU04544

Cowling A

To remove the cowling

1 Remove the quick fasteners at the front of the cowling

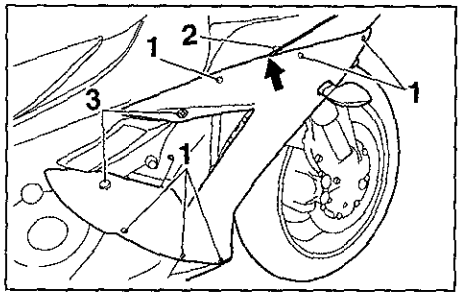

1 Quick fastener screw (× 6)
2 Screw
3 Bolt (× 2)

2. Remove the bolts and screw, and then loosen the quick fastener screws 1/4 turn counterclockwise
3 Slide the cowling backward at the area shown.

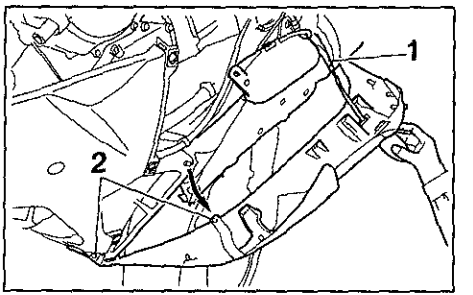

1 Turn signal light lead coupler
2 Screw (× 2)

4. Disconnect the turn signal light lead coupler
5 Remove the screws, and then take the cowling off.

To install the cowling

1. Install the screws
2 Connect the turn signal light lead coupler.
3. Place the cowling in the original position
4 Install the screw and the bolts, tighten the quick fastener screws, and then install the quick fasteners.

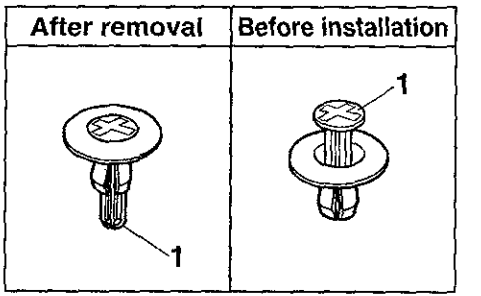

1 Quick fastener

NOTE:

To install the quick fastener, push the center pin out so that it will protrude from the fastener head, insert the fastener into the cowling, and then push the protruding pin in until it is flush with the fastener head.

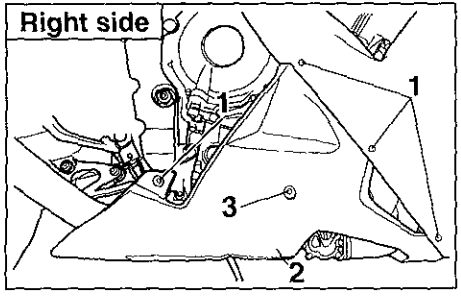

1 Quick fastener screw (× 4)
2 Cowling B
3 Bolt

EAU04555

Cowling B

To remove the cowling

Remove the bolts, loosen the quick fastener screws 1/4 turn counterclockwise, and then take the cowling off

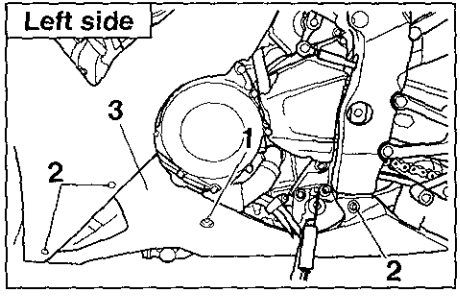

1 Bolt
2 Quick fastener screw (× 3)
3 Cowling B

To install the cowling

Place the cowling in the original position, and then tighten the quick fastener screws and install the bolts

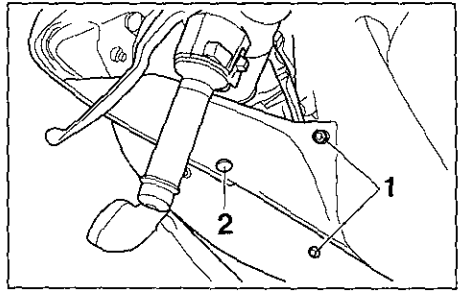

1 Quick fastener screw (× 2)
2 Screw

EAU04531

Panels A and B

To remove one of the panels

Loosen the quick fastener screws 1/4 turn counterclockwise, remove the screw, and then take the panel off

To install the panel

Place the panel in the original position, tighten the quick fastener screws, and then install the screw

EAU01880

Checking the spark plugs

The spark plugs are important engine components, which should be checked periodically, preferably by a Yamaha dealer Since heat and deposits will cause any spark plug to slowly erode, they should be removed and checked in accordance with the periodic maintenance and lubrication chart. In addition, the condition of the spark plugs can reveal the condition of the engine.

The porcelain insulator around the center electrode of each spark plug should be a medium-to-light tan (the ideal color when the motorcycle is ridden normally), and all spark plugs installed in the engine should have the same color If any spark plug shows a distinctly different color, the engine could be defective. Do not attempt to diagnose such problems yourself. Instead, have a Yamaha dealer check the motorcycle.

If a spark plug shows signs of electrode erosion and excessive carbon or other deposits, it should be replaced.

Specified spark plug:
CR9EIA 9 (NGK) or
IU27D (DENSO)

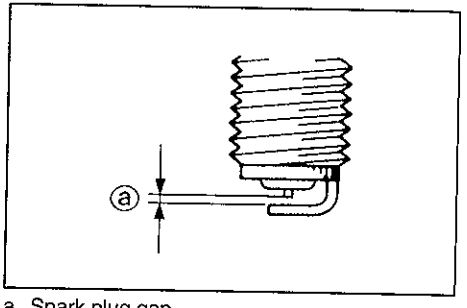

a Spark plug gap

Before installing a spark plug, the spark plug gap should be measured with a wire thickness gauge and, if necessary, adjusted to specification

Spark plug gap:
0 8–0 9 mm

Clean the surface of the spark plug gasket and its mating surface, and then wipe off any grime from the spark plug threads

Tightening torque Spark plug: 12 5 Nm (1 25 m kgf)

NOTE:
If a torque wrench is not available when installing a spark plug, a good estimate of the correct torque is 1/4–1/2 turn past finger tight However, the spark plug should be tightened to the specified torque as soon as possible

EAU04279

Engine oil and oil filter cartridge

The engine oil level should be checked before each ride In addition, the oil must be changed and the oil filter cartridge replaced at the intervals specified in the periodic maintenance and lubrication chart

To check the engine oil level

1 Place the motorcycle on a level surface and hold it in an upright position

NOTE:
Make sure that the motorcycle is positioned straight up when checking the oil level A slight tilt to the side can result in a false reading

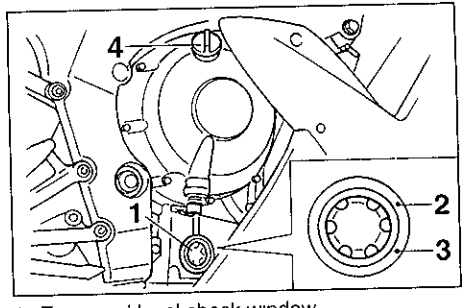

1 Engine oil level check window
2 Maximum level mark
3 Minimum level mark
4 Engine oil filler cap

2 Start the engine, warm it up for several minutes, and then turn it off
3 Wait a few minutes until the oil settles, and then check the oil level through the check window located at the bottom-right side of the crankcase

NOTE:
The engine oil should be between the minimum and maximum level marks

4 If the engine oil is below the minimum level mark, add sufficient oil of the recommended type to raise it to the correct level

To change the engine oil (with or without oil filter cartridge replacement)

1. Remove cowling B. (See page 6-7 for cowling removal and installation procedures)
2. Start the engine, warm it up for several minutes, and then turn it off.
3. Place an oil pan under the engine to collect the used oil.

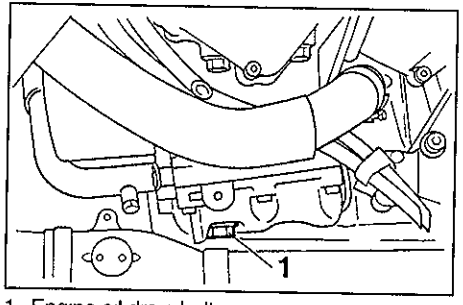

1 Engine oil drain bolt

4. Remove the engine oil filler cap and drain bolt to drain the oil from the crankcase

NOTE:
Skip steps 5–7 if the oil filter cartridge is not being replaced.

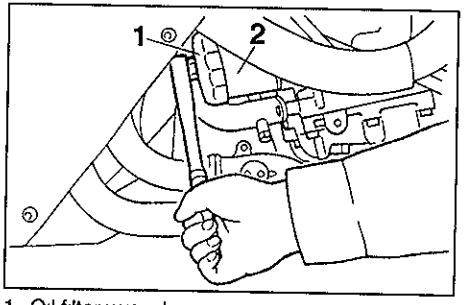

1 Oil filter wrench
2 Oil filter cartridge

5 Remove the oil filter cartridge with an oil filter wrench.

NOTE:
An oil filter wrench is available at a Yamaha dealer.

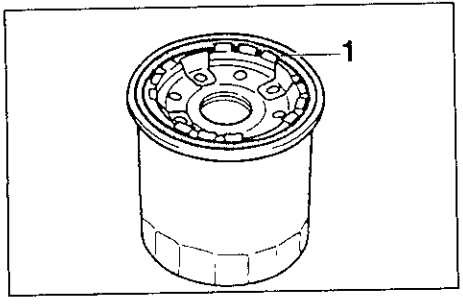

1 O-ring

6 Apply a thin coat of engine oil to the O-ring of the new oil filter cartridge

6

NOTE:
Make sure that the O-ring is properly seated

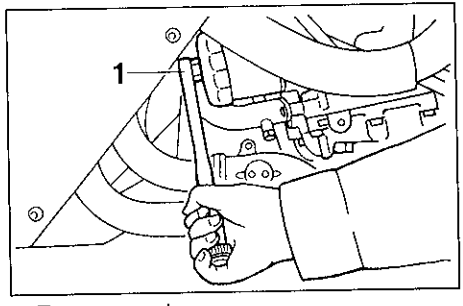

1 Torque wrench

7 Install the new oil filter cartridge, and then tighten it to the specified torque with a torque wrench

Tightening torque Oil filter cartridge 17 Nm (1 7 m kgf)

8 Install the engine oil drain bolt, and then tighten it to the specified torque

Tightening torque Engine oil drain bolt 43 Nm (4 3 m kgf)

9 Add the specified amount of the recommended engine oil, and then install and tighten the oil filler cap

Recommended engine oil· See page 8-1 Oil quantity Without oil filter cartridge replacement 2 9 L With oil filter cartridge replacement 3 1 L Total amount (dry engine) 3 8 L

ECA00105

CAUTION:

- **In order to prevent clutch slippage (since the engine oil also lubricates the clutch), do not mix any chemical additives with the oil or use oils of grade "CD" or higher. In addition, do not use oils labeled "ENERGY CONSERVING II" or higher.**
- **Make sure that no foreign material enters the crankcase.**

10 Start the engine, and then let it idle for several minutes while checking it for oil leakage. If oil is leaking, immediately turn the engine off and check for the cause.

NOTE:
After the engine is started, the engine oil level warning light should go off if the oil level is sufficient

EC000067

CAUTION:
If the oil level warning light flickers or remains on, immediately turn the engine off and have a Yamaha dealer check the vehicle.

11 Turn the engine off, and then check the oil level and correct it if necessary
12. Install the cowling

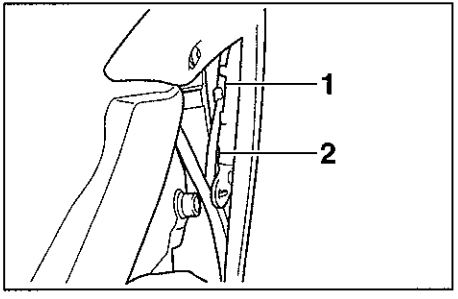

1 Maximum level mark
2 Minimum level mark

EAU04298

Coolant

The coolant level should be checked before each ride In addition, the coolant must be changed at the intervals specified in the periodic maintenance and lubrication chart

To check the coolant level

1 Place the motorcycle on a level surface and hold it in an upright position

NOTE:
- The coolant level must be checked on a cold engine since the level varies with engine temperature.
- Make sure that the motorcycle is positioned straight up when checking the coolant level. A slight tilt to the side can result in a false reading

2 Check the coolant level in the coolant reservoir.

NOTE:
The coolant should be between the minimum and maximum level marks

3. If the coolant is at or below the minimum level mark, remove panel A (See page 6-7 for panel removal and installation procedures.), remove the reservoir cap, add coolant to the maximum level mark, and then install the reservoir cap and the panel.

Coolant reservoir capacity:
0.24 L

EC000080

CAUTION:

- **If coolant is not available, use distilled water or soft tap water instead. Do not use hard water or salt water since it is harmful to the engine.**
- **If water has been used instead of coolant, replace it with coolant as soon as possible, otherwise the engine may not be sufficiently cooled and the cooling system will not be protected against frost and corrosion.**
- **If water has been added to the coolant, have a Yamaha dealer check the antifreeze content of the coolant as soon as possible, otherwise the effectiveness of the coolant will be reduced.**

EW000067

WARNING

Never attempt to remove the radiator cap when the engine is hot.

NOTE:

- The radiator fan is automatically switched on or off according to the coolant temperature in the radiator
- If the engine overheats, see page 6-45 for further instructions

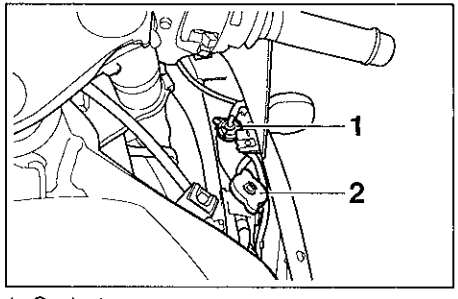

1 Coolant reservoir cap
2 Radiator cap

EAU04524

To change the coolant

1 Place the motorcycle on a level surface and let the engine cool if necessary
2 Remove cowlings A and B, and panel A (See pages 6-5–6-7 for cowling and panel removal and installation procedures)
3 Place a container under the engine to collect the used coolant
4 Remove the radiator cap and coolant reservoir cap

EW000067

WARNING

Never attempt to remove the radiator cap when the engine is hot.

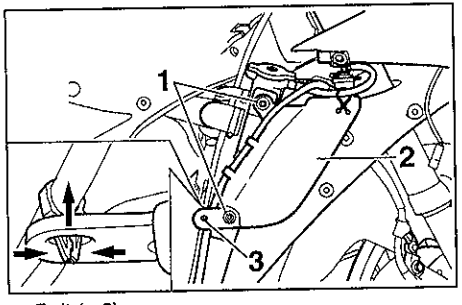

1 Bolt (× 2)
2 Coolant reservoir
3 Clutch cable holder

5 Remove the clutch cable holder from the coolant reservoir as shown
6 Remove the coolant reservoir by removing the bolts, and then turn the coolant reservoir upside down to empty it
7. Install the coolant reservoir by installing the bolts, and then install the clutch cable holder.

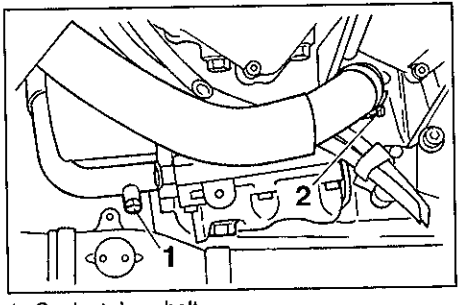

1 Coolant drain bolt
2 Clamp screw

8. Remove the coolant drain bolt to drain the cooling system
9. Loosen the radiator hose clamp screw located at the left side of the engine, and then pull off the hose to drain the radiator
10. After the coolant is completely drained, thoroughly flush the cooling system with clean tap water.
11. Install the coolant drain bolt, and then tighten it to the specified torque

NOTE:
Check the washer for damage and replace it if necessary.

Tightening torque:
Coolant drain bolt
10 Nm (1.0 m·kgf)

12. Connect the radiator hose, and then tighten the clamp screw

13 Pour the specified amount of recommended coolant into the radiator and reservoir

Antifreeze/water mixture ratio 1 1 Recommended antifreeze High-quality ethylene glycol antifreeze containing corrosion inhibitors for aluminum engines Coolant quantity Total amount 2 45 L Coolant reservoir capacity 0 24 L

EC000080

CAUTION:

- **If coolant is not available, use distilled water or soft tap water instead. Do not use hard water or salt water since it is harmful to the engine.**
- **If water has been used instead of coolant, replace it with coolant as soon as possible, otherwise the engine may not be sufficiently cooled and the cooling system will not be protected against frost and corrosion.**
- **If water has been added to the coolant, have a Yamaha dealer check the antifreeze content of the coolant as soon as possible, otherwise the effectiveness of the coolant will be reduced.**

14 Install the radiator cap and the coolant reservoir cap, and then start the engine and let it idle for several minutes During this period, rev the engine two or three times between 3,000–5,000 r/min, and then turn it off

15 Remove the radiator cap to check the coolant level in the radiator If necessary, add sufficient coolant until it reaches the top of the radiator, and then install the radiator cap

16 Check the coolant level in the reservoir If necessary, remove the coolant reservoir cap, add coolant to the maximum level mark, and then install the cap

17 Start the engine, and then check the vehicle for coolant leakage If coolant is leaking, have a Yamaha dealer check the cooling system

18 Install the cowlings and the panel

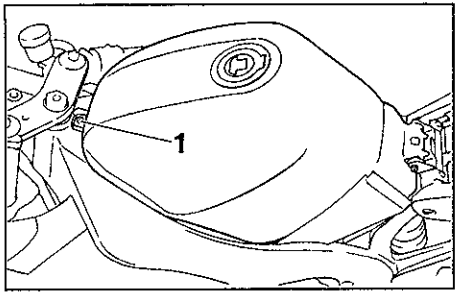

1 Bolt

EAU04572*

Replacing the air filter element

The air filter element should be replaced at the intervals specified in the periodic maintenance and lubrication chart. Replace the air filter element more frequently if you are riding in unusually wet or dusty areas

1 Remove the rider seat (See page 3-16 for rider seat removal and installation procedures)
2 Remove the bolt

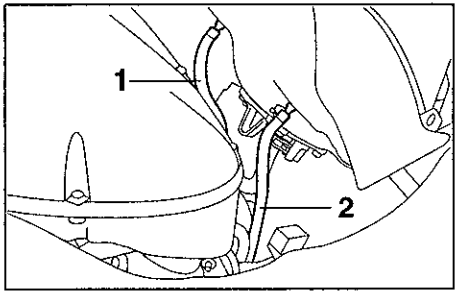

1 Fuel tank breather hose
2 Fuel tank overflow hose

3. Lift the front of the fuel tank, and then tilt it back and away from the air filter case (Do not disconnect the fuel hoses!)

EW000071

WARNING

- **Make sure that the fuel tank is well supported.**
- **Do not tilt or pull the fuel tank too much, otherwise the fuel hoses may come loose, which could cause fuel leakage.**

4 Disconnect the fuel tank breather hose and the fuel tank overflow hose

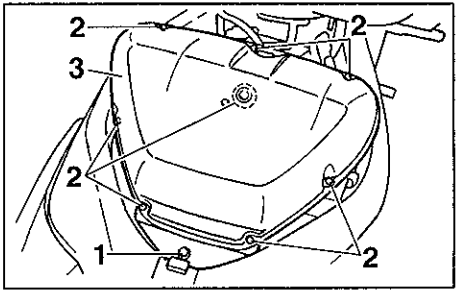

1 Bolt
2 Screw (× 8)
3 Air filter case cover

5. Remove the air filter case cover by removing the screws and bolt

6

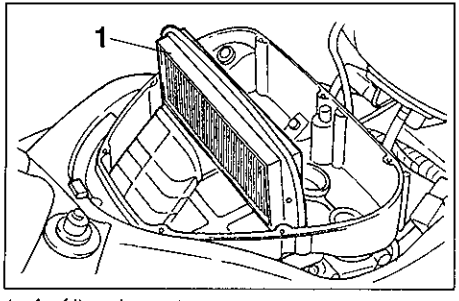

1 Air filter element

6 Pull the air filter element out
7 Insert a new air filter element into the air filter case

EC000082

CAUTION:

- **Make sure that the air filter element is properly seated in the air filter case.**
- **The engine should never be operated without the air filter element installed, otherwise the pistons and/or cylinders may become excessively worn.**

8 Install the air filter case cover by installing the screws and bolt

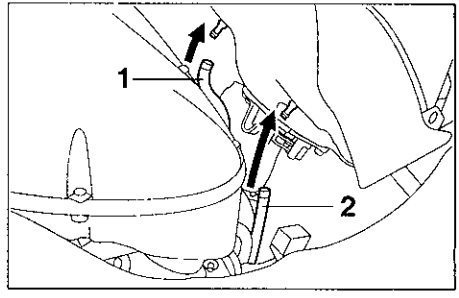

1 Fuel tank breather hose
2 Fuel tank overflow hose

9 Connect the fuel tank breather hose and the fuel tank overflow hose, place the fuel tank in the original position, and then install the bolt

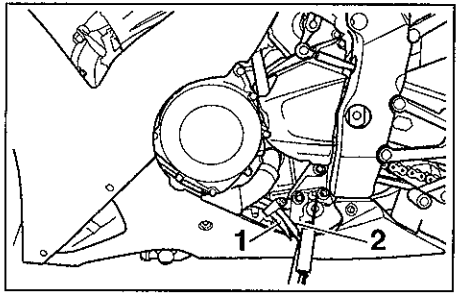

1 Fuel tank breather hose
2 Fuel tank overflow hose

EWA00067

WARNING

- **Before installing the fuel tank, make sure that the fuel hoses are not damaged. If any fuel hose is damaged, do not start the engine but have a Yamaha dealer replace the hose, otherwise fuel may leak.**
- **Make sure that the fuel hoses are properly connected and routed, and not pinched.**
- **Be sure to place the fuel tank breather hose and the fuel tank overflow hose in the original position.**

10 Install the rider seat

EAU00632

Adjusting the engine idling speed

The engine idling speed must be checked and, if necessary, adjusted as follows at the intervals specified in the periodic maintenance and lubrication chart.

1. Start the engine and warm it up for several minutes at 1,000–2,000 r/min while occasionally revving it to 4,000–5,000 r/min

NOTE:
The engine is warm when it quickly responds to the throttle

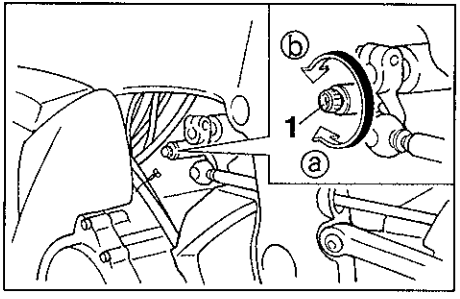

1 Throttle stop screw

2 Check the engine idling speed and, if necessary, adjust it to specification by turning the throttle stop screw To increase the engine idling speed, turn the screw in direction ⓐ To decrease the engine idling speed, turn the screw in direction ⓑ

Engine idling speed: 1,000–1,100 r/min

NOTE:
If the specified idling speed cannot be obtained as described above, have a Yamaha dealer make the adjustment

6

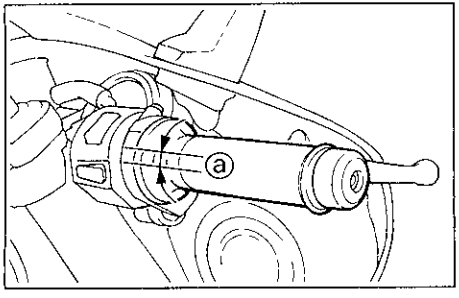

a Throttle cable free play

EAU00635

Adjusting the throttle cable free play

The throttle cable free play should measure 3–5 mm at the throttle grip Periodically check the throttle cable free play and, if necessary, have a Yamaha dealer adjust it

EAU00637

Adjusting the valve clearance

The valve clearance changes with use, resulting in improper air-fuel mixture and/or engine noise To prevent this from occurring, the valve clearance must be adjusted by a Yamaha dealer at the intervals specified in the periodic maintenance and lubrication chart

EAU03296

Tires

To maximize the performance, durability, and safe operation of your motorcycle, note the following points regarding the specified tires.

Tire air pressure

The tire air pressure should be checked and, if necessary, adjusted before each ride

EWG00082

WARNING

- **The tire air pressure must be checked and adjusted on cold tires (i.e., when the temperature of the tires equals the ambient temperature).**
- **The tire air pressure must be adjusted in accordance with the riding speed and with the total weight of rider, passenger, cargo, and accessories approved for this model.**

Tire air pressure (measured on cold tires)		
Load*	Front	Rear
Up to 90 kg	250 kPa (2 50 kgf/cm², 2 50 bar)	250 kPa (2 50 kgf/cm², 2 50 bar)
90 kg–maximum	250 kPa (2 50 kgf/cm², 2 50 bar)	290 kPa (2 90 kgf/cm², 2 90 bar)
High-speed riding	250 kPa (2 50 kgf/cm², 2 50 bar)	250 kPa (2 50 kgf/cm², 2 50 bar)

Maximum load*	202 kg

* Total weight of rider, passenger, cargo and accessories

EW000083

WARNING

Proper loading of your motorcycle is important for several characteristics of your motorcycle, such as handling, braking, performance and safety. Do not carry loosely packed items that can shift. Securely pack your heaviest items close to the center of the motorcycle, and distribute the weight evenly from side to side. Properly adjust the suspension for your load, and check the condition and pressure of your tires. NEVER OVERLOAD YOUR MOTORCYCLE. Make sure that the total weight of the cargo, rider, passenger, and accessories (cowling, saddlebags, etc. if approved for this model) does not exceed the maximum load of the motorcycle. Operation of an overloaded motorcycle could cause tire damage, an accident, or even injury.

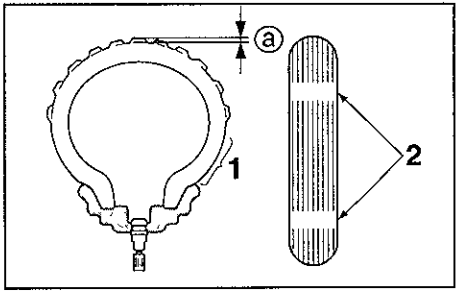

1 Sidewall
2 Tire wear indicator
a Tire tread depth

Tire inspection

Always check the tires before operating the motorcycle. If a tire tread shows crosswise lines (minimum tread depth), if the tire has a nail or glass fragments in it, or if the sidewall is cracked, contact a Yamaha dealer immediately and have the tire replaced

EW000079

WARNING

- **Have a Yamaha dealer replace excessively worn tires. Besides being illegal, operating the motorcycle with excessively worn tires decreases riding stability and can lead to loss of control.**
- **The replacement of all wheel and brake related parts, including the tires, should be left to a Yamaha dealer, who has the necessary professional knowledge and experience.**

Minimum tire tread depth (front and rear)	1 0 mm

NOTE:

The tire tread depth limits may differ from country to country Always comply with the local regulations

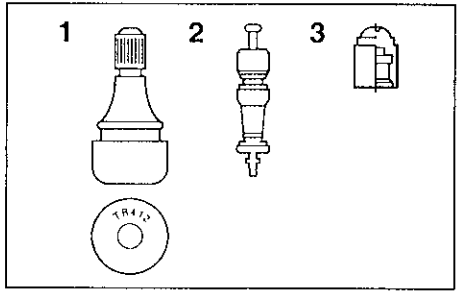

1 Tire air valve
2 Tire air valve core
3 Tire air valve cap with seal

Tire information

This motorcycle is equipped with cast wheels and tubeless tires with valves

EW000080

WARNING

- **The front and rear tires should be of the same make and design, otherwise the handling characteristics of the motorcycle cannot be guaranteed.**
- **After extensive tests, only the tires listed below have been approved for this model by Yamaha Motor Co., Ltd.**
- **Always make sure that the valve caps are securely installed to prevent air pressure leakage.**
- **Use only the tire valves and valve cores listed below to avoid tire deflation during a high-speed ride.**

FRONT

Manufacturer	Size	Model
Michelin	120/70 ZR17 M/C (58W)	Pilot SPORT E
	120/70 ZR17 (58W)	
Dunlop	120/70 ZR17 M/C (58W)	D208FL

REAR

Manufacturer	Size	Model
Michelin	190/50 ZR17 M/C (73W)	Pilot SPORT
	190/50 ZR17 (73W)	
Dunlop	190/50 ZR17 M/C (73W)	D208L

FRONT & REAR	
Tire air valve	TR412
Valve core	#9000A (original)

EAU00684

WARNING

This motorcycle is fitted with super-high-speed tires. Note the following points in order to make the most efficient use of these tires.

- **Use only the specified replacement tires. Other tires may run the danger of bursting at super high speeds.**
- **Brand-new tires can have a relatively poor grip on certain road surfaces until they have been "broken in". Therefore, it is advisable before doing any high-speed riding to ride conservatively for approximately 100 km after installing a new tire.**
- **The tires must be warmed up before a high-speed run.**
- **Always adjust the tire air pressure according to the operating conditions.**

EAU03773

Cast wheels

To maximize the performance, durability, and safe operation of your motorcycle, note the following points regarding the specified wheels

- The wheel rims should be checked for cracks, bends or warpage before each ride If any damage is found, have a Yamaha dealer replace the wheel. Do not attempt even the smallest repair to the wheel A deformed or cracked wheel must be replaced
- The wheel should be balanced whenever either the tire or wheel has been changed or replaced. An unbalanced wheel can result in poor performance, adverse handling characteristics, and a shortened tire life
- Ride at moderate speeds after changing a tire since the tire surface must first be "broken in" for it to develop its optimal characteristics

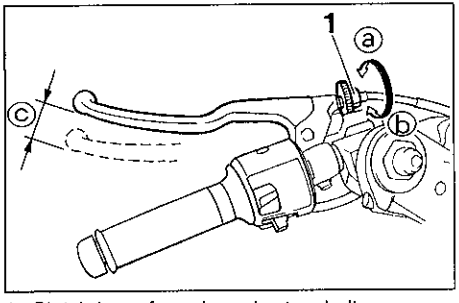

1 Clutch lever free play adjusting bolt
c Clutch lever free play

EAU01356

Adjusting the clutch lever free play

The clutch lever free play should measure 10–15 mm as shown Periodically check the clutch lever free play and, if necessary, adjust it as follows

To increase the clutch lever free play, turn the adjusting bolt at the clutch lever in direction ⓐ To decrease the clutch lever free play, turn the adjusting bolt in direction ⓑ

NOTE:

If the specified clutch lever free play cannot be obtained as described above, proceed as follows

1 Fully turn the adjusting bolt at the clutch lever in direction ⓐ to loosen the clutch cable

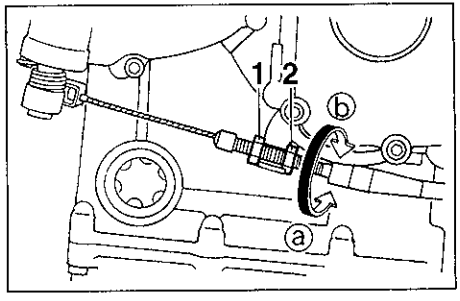

1 Locknut
2 Clutch lever free play adjusting nut (crankcase)

2 Remove cowling B (See page 6-7 for cowling removal and installation procedures)
3 Loosen the locknut at the crankcase
4 To increase the clutch lever free play, turn the adjusting nut in direction ⓐ To decrease the clutch lever free play, turn the adjusting nut in direction ⓑ
5 Tighten the locknut
6 Install the cowling

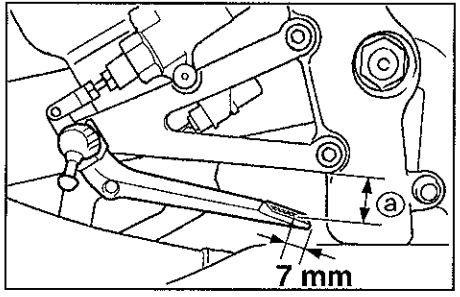

a Distance between brake pedal and footrest bracket

EAU01357

Adjusting the brake pedal position

The top of the brake pedal should be positioned approximately 38–42 mm below the bottom of the footrest bracket as shown Periodically check the brake pedal position and, if necessary, have a Yamaha dealer adjust it.

EW000109

WARNING

A soft or spongy feeling in the brake pedal can indicate the presence of air in the hydraulic system. If there is air in the hydraulic system, have a Yamaha dealer bleed the system before operating the motorcycle. Air in the hydraulic system will diminish the braking performance, which may result in loss of control and an accident.

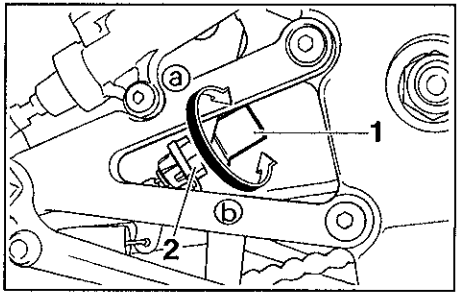

1 Rear brake light switch
2 Rear brake light switch adjusting nut

EAU00713

Adjusting the rear brake light switch

The rear brake light switch, which is activated by the brake pedal, is properly adjusted when the brake light comes on just before braking takes effect. If necessary, adjust the brake light switch as follows

Turn the adjusting nut while holding the rear brake light switch in place. To make the brake light come on earlier, turn the adjusting nut in direction ⓐ To make the brake light come on later, turn the adjusting nut in direction ⓑ

EAU00721

Checking the front and rear brake pads

The front and rear brake pads must be checked for wear at the intervals specified in the periodic maintenance and lubrication chart

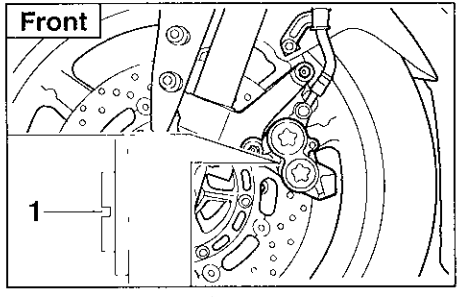

1 Brake pad wear indicator groove

EAU00725

Front brake pads

Each front brake pad is provided with a wear indicator groove, which allows you to check the brake pad wear without having to disassemble the brake To check the brake pad wear, check the wear indicator groove If a brake pad has worn to the point that the wear indicator groove has almost disappeared, have a Yamaha dealer replace the brake pads as a set

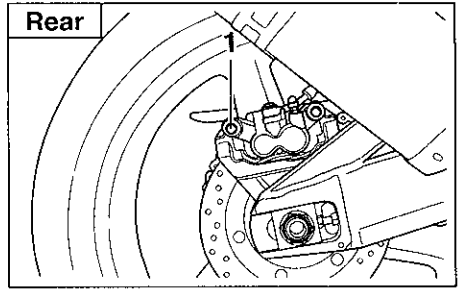

1 Brake caliper bolt

EAU04396

Rear brake pads

Each rear brake pad is provided with a wear indicator groove, which allows you to check the brake pad wear without having to disassemble the brake Check the brake pad wear as follows

1 Remove the brake caliper bolt, and then tilt the caliper forward to inspect the wear indicator groove If a brake pad has worn to the point that the wear indicator groove has almost disappeared, have a Yamaha dealer replace the brake pads as a set

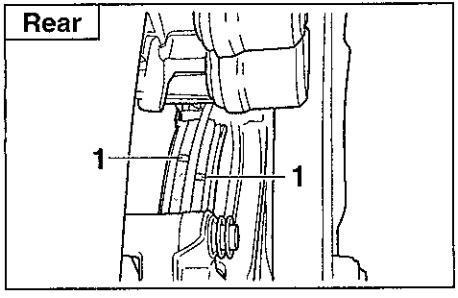

1 Brake pad wear indicator groove

2 Install the brake caliper bolt, and then tighten it to the specified torque

Tightening torque: Brake caliper bolt: 27 Nm (2.7 m·kgf)

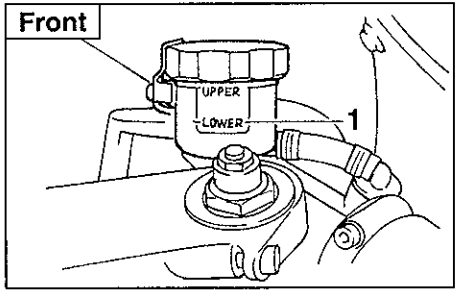

1 Minimum level mark

EAU03294

Checking the brake fluid level

Insufficient brake fluid may allow air to enter the brake system, possibly causing it to become ineffective

Before riding, check that the brake fluid is above the minimum level mark and replenish if necessary A low brake fluid level may indicate worn brake pads and/or brake system leakage If the brake level is low, be sure to check the brake pads for wear and the brake system for leakage

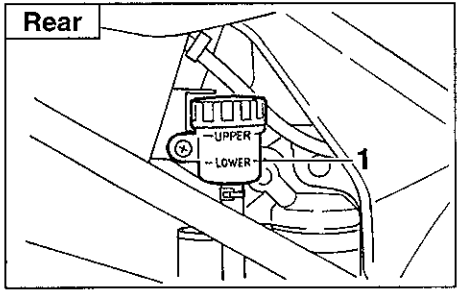

1 Minimum level mark

Observe these precautions:

- When checking the fluid level, make sure that the top of the brake fluid reservoir is level
- Use only the recommended quality brake fluid, otherwise the rubber seals may deteriorate, causing leakage and poor braking performance

Recommended brake fluid: DOT 4

- Refill with the same type of brake fluid. Mixing fluids may result in a harmful chemical reaction and lead to poor braking performance

6

- Be careful that water does not enter the brake fluid reservoir when refilling Water will significantly lower the boiling point of the fluid and may result in vapor lock
- Brake fluid may deteriorate painted surfaces or plastic parts Always clean up spilled fluid immediately
- As the brake pads wear, it is normal for the brake fluid level to gradually go down However, if the brake fluid level goes down suddenly, have a Yamaha dealer check the cause

EAU03976

Changing the brake fluid

Have a Yamaha dealer change the brake fluid at the intervals specified in the NOTE after the periodic maintenance and lubrication chart In addition, have the oil seals of the master cylinders and calipers as well as the brake hoses replaced at the intervals listed below or whenever they are damaged or leaking

- Oil seals Replace every two years
- Brake hoses Replace every four years

EAU00744

Drive chain slack

The drive chain slack should be checked before each ride and adjusted if necessary

To check the drive chain slack

1 Place the motorcycle on a level surface and hold it in an upright position

NOTE:

When checking and adjusting the drive chain slack, the motorcycle should be positioned straight up and there should be no weight on it

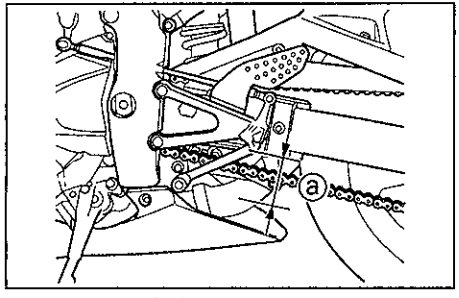

a Drive chain slack

2. Shift the transmission into the neutral position.
3 Move the rear wheel by pushing the motorcycle to locate the tightest portion of the drive chain, and then measure the drive chain slack as shown.

Drive chain slack 40–50 mm

4 If the drive chain slack is incorrect, adjust it as follows

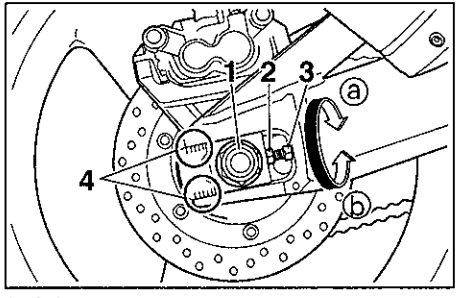

1 Axle nut
2. Drive chain slack adjusting bolt
3 Locknut
4 Alignment marks

EAU03608

To adjust the drive chain slack

1. Loosen the axle nut and the locknut on each side of the swingarm
2 To tighten the drive chain, turn the adjusting bolt on each side of the swingarm in direction ⓐ To loosen the drive chain, turn the adjusting bolt on each side of the swingarm in direction ⓑ, and then push the rear wheel forward.

NOTE:
Using the alignment marks on each side of the swingarm, make sure that both chain pullers are in the same position for proper wheel alignment

EC000096

CAUTION:
Improper drive chain slack will overload the engine as well as other vital parts of the motorcycle and can lead to chain slippage or breakage. To prevent this from occurring, keep the drive chain slack within the specified limits.

3 Tighten the locknuts, and then tighten the axle nut to the specified torque

Tightening torque Axle nut 150 Nm (15 0 m·kgf)

6

EAU03006

Lubricating the drive chain

The drive chain must be cleaned and lubricated at the intervals specified in the periodic maintenance and lubrication chart, otherwise it will quickly wear out, especially when riding in dusty or wet areas Service the drive chain as follows

EC000097

CAUTION:

The drive chain must be lubricated after washing the motorcycle or riding in the rain.

1 Clean the drive chain with kerosene and a small soft brush

ECA00053

CAUTION:

To prevent damaging the O-rings, do not clean the drive chain with steam cleaners, high-pressure washers or inappropriate solvents.

2 Wipe the drive chain dry
3 Thoroughly lubricate the drive chain with a special O-ring chain lubricant

ECA00052

CAUTION:

Do not use engine oil or any other lubricants for the drive chain, as they may contain substances that could damage the O-rings.

EAU02962

Checking and lubricating the cables

The operation of all control cables and the condition of the cables should be checked before each ride, and the cables and cable ends should be lubricated if necessary If a cable is damaged or does not move smoothly, have a Yamaha dealer check or replace it

Recommended lubricant
Engine oil

EW000112

WARNING

Damage to the outer sheath may interfere with proper cable operation and will cause the inner cable to rust. Replace a damaged cable as soon as possible to prevent unsafe conditions.

EAU04034

Checking and lubricating the throttle grip and cable

The operation of the throttle grip should be checked before each ride In addition, the cable should be lubricated or replaced at the intervals specified in the periodic maintenance chart.

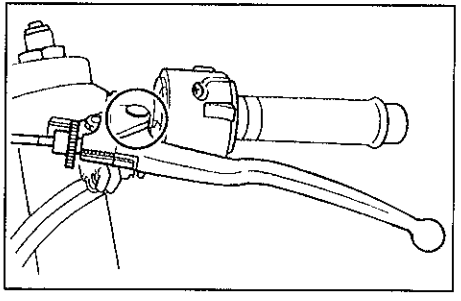

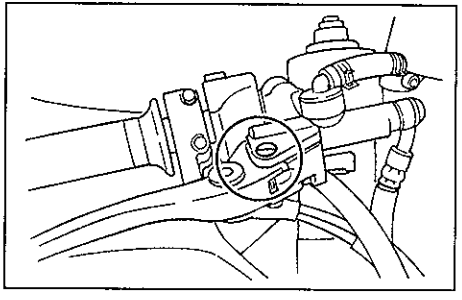

EAU03164

Checking and lubricating the brake and clutch levers

The operation of the brake and clutch levers should be checked before each ride, and the lever pivots should be lubricated if necessary

Recommended lubricant: Lithium-soap-based grease (all-purpose grease)

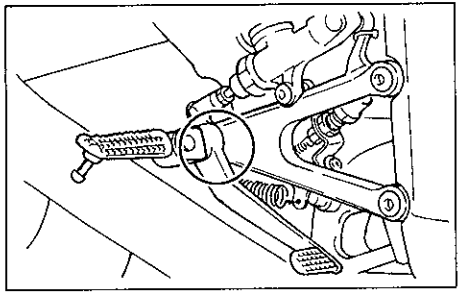

EAU03163

Lubricating the brake pedal

The operation of the brake pedal should be checked before each ride, and the pedal pivot should be lubricated if necessary

Recommended lubricant Lithium-soap-based grease (all-purpose grease)

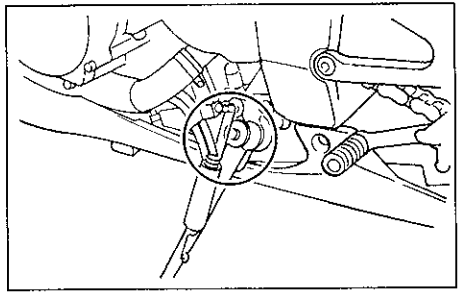

EAU03165

Checking and lubricating the sidestand

The operation of the sidestand should be checked before each ride, and the sidestand pivot and metal-to-metal contact surfaces should be lubricated if necessary

EW000113

WARNING

If the sidestand does not move up and down smoothly, have a Yamaha dealer check or repair it.

Recommended lubricant Lithium-soap-based grease (all-purpose grease)

EAU02939

Checking the front fork

The condition and operation of the front fork must be checked as follows at the intervals specified in the periodic maintenance and lubrication chart

To check the condition

EW000115

WARNING

Securely support the motorcycle so that there is no danger of it falling over.

Check the inner tubes for scratches, damage and excessive oil leakage

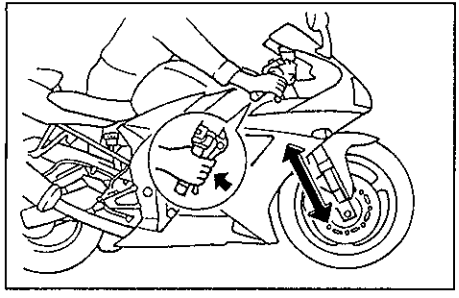

To check the operation

1. Place the motorcycle on a level surface and hold it in an upright position.
2. While applying the front brake, push down hard on the handlebars several times to check if the front fork compresses and rebounds smoothly.

EC000098

CAUTION

If any damage is found or the front fork does not operate smoothly, have a Yamaha dealer check or repair it.

EAU00794

Checking the steering

Worn or loose steering bearings may cause danger Therefore, the operation of the steering must be checked as follows at the intervals specified in the periodic maintenance and lubrication chart

1 Place a stand under the engine to raise the front wheel off the ground.

EW000115

WARNING

Securely support the motorcycle so that there is no danger of it falling over.

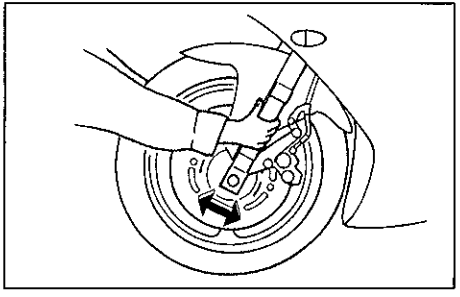

2 Hold the lower ends of the front fork legs and try to move them forward and backward If any free play can be felt, have a Yamaha dealer check or repair the steering

EAU01144

Checking the wheel bearings

The front and rear wheel bearings must be checked at the intervals specified in the periodic maintenance and lubrication chart If there is play in the wheel hub or if the wheel does not turn smoothly, have a Yamaha dealer check the wheel bearings

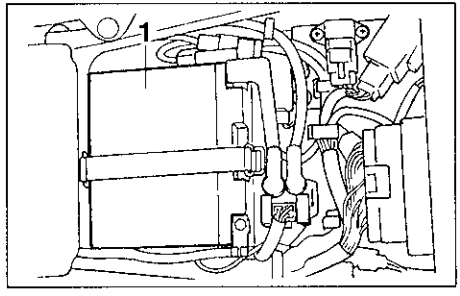

1 Battery

EAU01291

Battery

This motorcycle is equipped with a sealed-type (MF) battery, which does not require any maintenance There is no need to check the electrolyte or to add distilled water

To charge the battery

Have a Yamaha dealer charge the battery as soon as possible if it seems to have discharged Keep in mind that the battery tends to discharge more quickly if the motorcycle is equipped with optional electrical accessories

EW000116

WARNING

- **Electrolyte is poisonous and dangerous since it contains sulfuric acid, which causes severe burns. Avoid any contact with skin, eyes or clothing and always shield your eyes when working near batteries. In case of contact, administer the following FIRST AID.**
  - **EXTERNAL: Flush with plenty of water.**
  - **INTERNAL: Drink large quantities of water or milk and immediately call a physician.**
  - **EYES: Flush with water for 15 minutes and seek prompt medical attention.**
- **Batteries produce explosive hydrogen gas. Therefore, keep sparks, flames, cigarettes, etc., away from the battery and provide sufficient ventilation when charging it in an enclosed space.**

- **KEEP THIS AND ALL BATTERIES OUT OF THE REACH OF CHILDREN.**

To store the battery

1 If the motorcycle will not be used for more than one month, remove the battery, fully charge it, and then place it in a cool, dry place.
2 If the battery will be stored for more than two months, check it at least once a month and fully charge it if necessary
3 Fully charge the battery before installation
4. After installation, make sure that the battery leads are properly connected to the battery terminals.

EC000102

CAUTION:

- **Always keep the battery charged. Storing a discharged battery can cause permanent battery damage.**
- **To charge a sealed-type (MF) battery, a special (constant-voltage) battery charger is required. Using a conventional battery charger will damage the battery. If you do not have access to a sealed-type (MF) battery charger, have a Yamaha dealer charge your battery.**

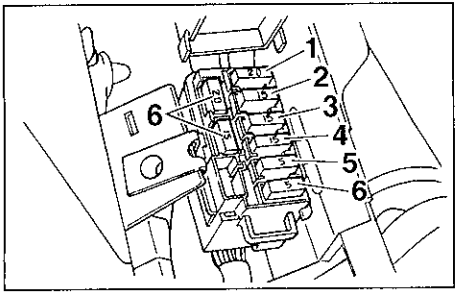

1 Headlight fuse
2 Signaling system fuse
3 Ignition fuse
4 Radiator fan fuse
5 Backup fuse (odometer and clock)
6 Spare fuse (× 3)

EAU04548

Replacing the fuses

The main fuse and the electronic fuel injection fuse are located under the rider seat (See page 3-16 for rider seat removal and installation procedures)
The fuse box, which contains the fuses for the individual circuits, is located under panel B (See page 6-7 for panel removal and installation procedures)
If a fuse is blown, replace it as follows

1 Turn the key to "OFF" and turn off the electrical circuit in question

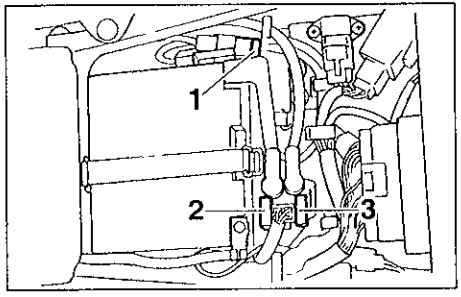

1 Main fuse
2 Electronic fuel injection fuse
3 Electronic fuel injection spare fuse

2 Remove the blown fuse, and then install a new fuse of the specified amperage

Specified fuses	
Main fuse	50 A
Headlight fuse	20 A
Signaling system fuse	15 A
Radiator fan fuse	15 A
Ignition fuse	15 A
Electronic fuel injection fuse	15 A
Backup fuse (odometer and clock).	5 A

EC000103

CAUTION:

Do not use a fuse of a higher amperage rating than recommended to avoid causing extensive damage to the electrical system and possibly a fire.

3 Turn the key to "ON" and turn on the electrical circuit in question to check if the device operates
4 If the fuse immediately blows again, have a Yamaha dealer check the electrical system

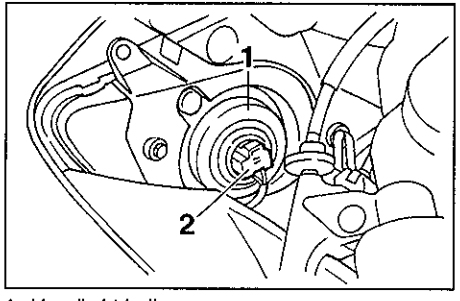

1 Headlight bulb cover
2 Headlight coupler

EAU04503

Replacing a headlight bulb

This motorcycle is equipped with quartz bulb headlights. If a headlight bulb burns out, replace it as follows.

1. Disconnect the headlight coupler, and then remove the bulb cover.

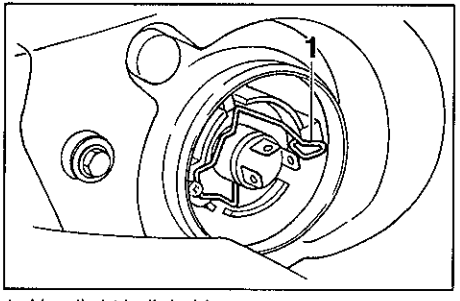

1 Headlight bulb holder

2. Unhook the headlight bulb holder, and then remove the defective bulb.

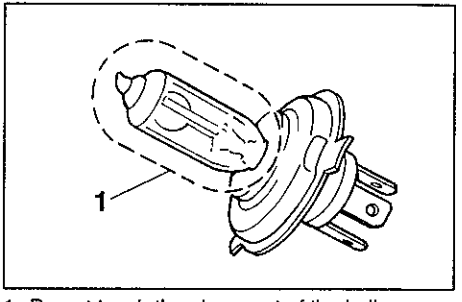

1 Do not touch the glass part of the bulb

EW000119

WARNING

Headlight bulbs get very hot. Therefore, keep flammable products away from a lit headlight bulb, and do not touch the bulb until it has cooled down.

3. Place a new headlight bulb into position, and then secure it with the bulb holder.

EC000104

CAUTION:

Take care not to damage the following parts:

- **Headlight bulb**
  Do not touch the glass part of the headlight bulb to keep it free from oil, otherwise the transparency of the glass, the luminosity of the bulb, and the bulb life will be adversely affected. Thoroughly clean off any dirt and fingerprints on the headlight bulb using a cloth moistened with alcohol or thinner.
- **Headlight lens**
  - **Do not affix any type of tinted film or stickers to the headlight lens.**
  - **Do not use a headlight bulb of a wattage higher than specified.**

4 Install the headlight bulb cover, and then connect the coupler
5 Have a Yamaha dealer adjust the headlight beam if necessary

EAU03730

Tail/brake light

This motorcycle is equipped with an LED type of tail/brake light
If the tail/brake light does not come on, have a Yamaha dealer check it

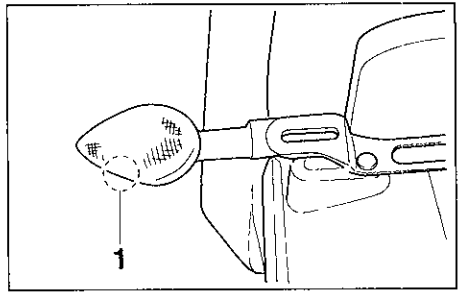

1 Screw

EAU03497

Replacing a turn signal light bulb

1 Remove the turn signal light lens by removing the screw
2 Remove the defective bulb by pushing it in and turning it counterclockwise
3 Insert a new bulb into the socket, push it in, and then turn it clockwise until it stops
4 Install the lens by installing the screw

ECA00065

CAUTION:

Do not overtighten the screw, otherwise the lens may break.

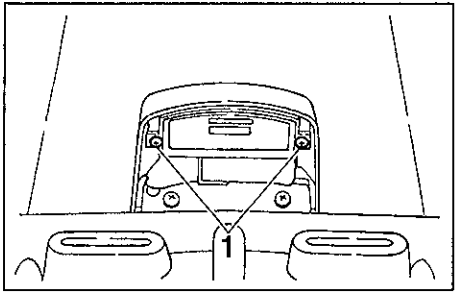

1 Screw (× 2)

EAU04574

Replacing the license plate light bulb

1. Remove the license plate light unit by removing the screws

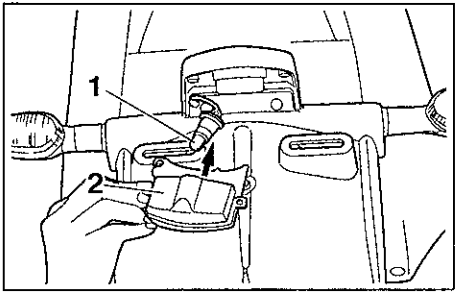

1 License plate light bulb
2 License plate light unit

2. Remove the socket (together with the bulb) by pulling it out
3. Remove the defective bulb by pulling it out
4. Insert a new bulb into the socket.
5. Install the socket (together with the bulb) by pushing it in
6. Install the license plate light unit by installing the screws

EAU01579

Supporting the motorcycle

Since this model is not equipped with a centerstand, follow these precautions when removing the front and rear wheel or performing other maintenance requiring the motorcycle to stand upright Check that the motorcycle is in a stable and level position before starting any maintenance A strong wooden box can be placed under the engine for added stability

To service the front wheel

1 Stabilize the rear of the motorcycle by using a motorcycle stand or, if an additional motorcycle stand is not available, by placing a jack under the frame in front of the rear wheel
2 Raise the front wheel off the ground by using a motorcycle stand

To service the rear wheel

Raise the rear wheel off the ground by using a motorcycle stand or, if a motorcycle stand is not available, by placing a jack either under each side of the frame in front of the rear wheel or under each side of the swingarm

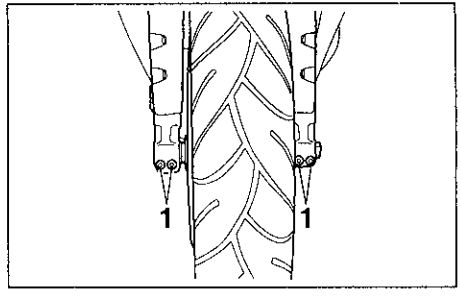

1 Front wheel axle pinch bolt (× 4)

EAU04532

Front wheel

To remove the front wheel

EW000122

WARNING

- **It is advisable to have a Yamaha dealer service the wheel.**
- **Securely support the motorcycle so that there is no danger of it falling over.**

1 Loosen the axle bolt, the wheel axle pinch bolts, and then the brake caliper bolts

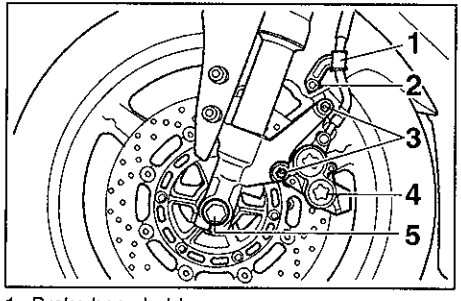

1 Brake hose holder
2 Bolt/nut
3 Bolt (× 2)
4 Brake caliper
5 Axle bolt

2. Lift the front wheel off the ground according to the procedure on page 6-39
3. Remove the brake hose holder on each side by removing the bolt and nut
4. Remove the brake caliper on each side by removing the bolts

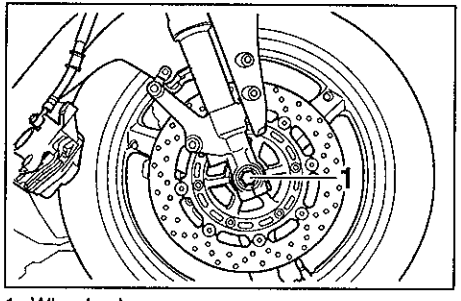

1 Wheel axle

5. Remove the axle bolt, pull the wheel axle out, and then remove the wheel

ECA00046

CAUTION:

Do not apply the brake after the brake calipers have been removed, otherwise the brake pads will be forced shut.

EAU04549

To install the front wheel

1. Lift the wheel up between the fork legs
2. Insert the wheel axle
3. Lower the front wheel so that it is on the ground.
4. Install the brake calipers by installing the bolts, and then tightening them to the specified torque

NOTE:

Make sure that there is enough space between the brake pads before installing the brake calipers onto the brake discs

Tightening torque:
Brake caliper bolt:
40 Nm (4 0 m·kgf)

5. Install the brake hose holders by installing the bolts and nuts.

6

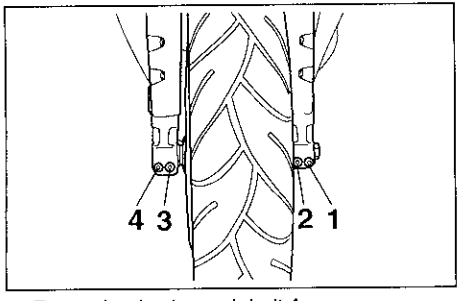

1 Front wheel axle pinch bolt A
2 Front wheel axle pinch bolt B
3 Front wheel axle pinch bolt C
4 Front wheel axle pinch bolt D

6 Secure the wheel axle by installing the axle bolt, and then tightening it to the specified torque

NOTE:
While tightening the axle bolt, hold the wheel axle with a 19-mm hexagon wrench to keep it from turning

Tightening torque
Axle bolt
91 Nm (9 1 m·kgf)

7 Tighten wheel axle pinch bolt A, and then pinch bolt B to the specified torque

Tightening torque
Wheel axle pinch bolt
23 Nm (2 3 m kgf)

8 Tap the outer side of the right fork leg with a rubber mallet to align it with the end of the wheel axle
9 Tighten wheel axle pinch bolt C, and then pinch bolt D to the specified torque

Tightening torque
Wheel axle pinch bolt
23 Nm (2 3 m kgf)

NOTE:
After tightening all wheel axle pinch bolts, the tightening torque of pinch bolts A and C will be reduced to 15–20 Nm (1 5–2 0 m·kgf) However, do not retighten them to the original, specified tightening torque

10 While applying the front brake, push down hard on the handlebar several times to check for proper fork operation

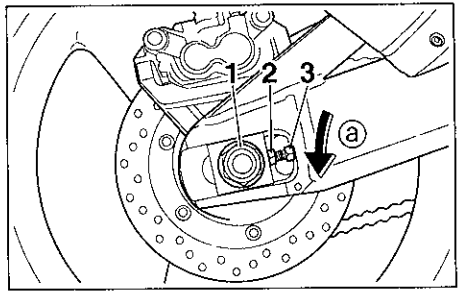

1 Axle nut
2 Drive chain slack adjusting bolt
3 Locknut

EAU04533

Rear wheel

To remove the rear wheel

EW000122

WARNING

- **It is advisable to have a Yamaha dealer service the wheel.**
- **Securely support the motorcycle so that there is no danger of it falling over.**

1 Loosen the axle nut and the brake caliper bolts
2 Lift the rear wheel off the ground according to the procedure on page 6-39

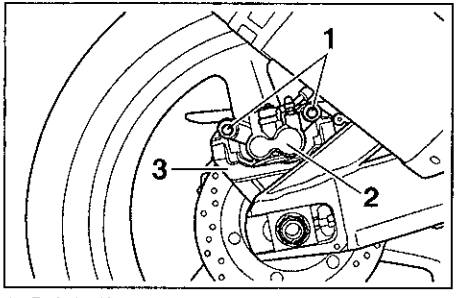

1. Bolt (× 2)
2 Brake caliper
3 Brake caliper bracket

3 Remove the axle nut, and then remove the brake caliper by removing the bolts
4 Loosen the locknut on each side of the swingarm
5 Turn the drive chain slack adjusting bolts fully in direction ⓐ

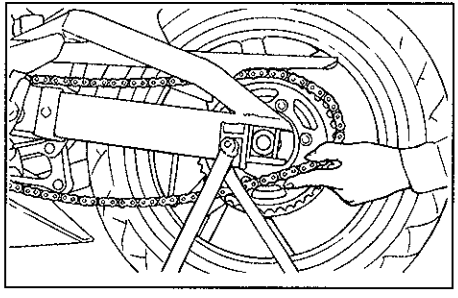

6 Push the wheel forward, and then remove the drive chain from the rear sprocket.

NOTE:
The drive chain does not need to be disassembled in order to remove and install the rear wheel

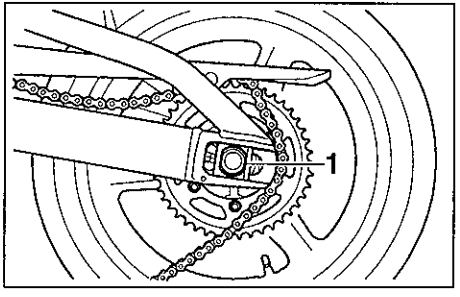

1 Wheel axle

7 While supporting the brake caliper bracket, pull the wheel axle out.
8 Remove the wheel

ECA00119

CAUTION:
Do not apply the brake after the wheel has been removed together with the brake disc, otherwise the brake caliper pistons will be forced out.

6

EAU04534

To install the rear wheel

1 Install the wheel and the brake caliper bracket by inserting the wheel axle from the left-hand side

NOTE:
Make sure that there is enough space between the brake pads before installing the wheel

2 Install the drive chain onto the rear sprocket, and then adjust the drive chain slack (See page 6-27 for drive chain slack adjustment procedures.)
3 Install the axle nut, and then lower the rear wheel so that it is on the ground
4 Install the brake caliper by installing the bolts
5 Tighten the axle nut and the brake caliper bolts to the specified torques

Tightening torques Axle nut 150 Nm (15 0 m kgf) Brake caliper bolt 27 Nm (2 7 m kgf)

EAU03087

Troubleshooting

Although Yamaha motorcycles receive a thorough inspection before shipment from the factory, trouble may occur during operation Any problem in the fuel, compression, or ignition systems, for example, can cause poor starting and loss of power

The following troubleshooting charts represent quick and easy procedures for checking these vital systems yourself However, should your motorcycle require any repair, take it to a Yamaha dealer, whose skilled technicians have the necessary tools, experience, and know-how to service the motorcycle properly

Use only genuine Yamaha replacement parts Imitation parts may look like Yamaha parts, but they are often inferior, have a shorter service life and can lead to expensive repair bills

EAU02990

Troubleshooting charts

Starting problems or poor engine performance

EW000125

WARNING

Keep away open flames and do not smoke while checking or working on the fuel system.

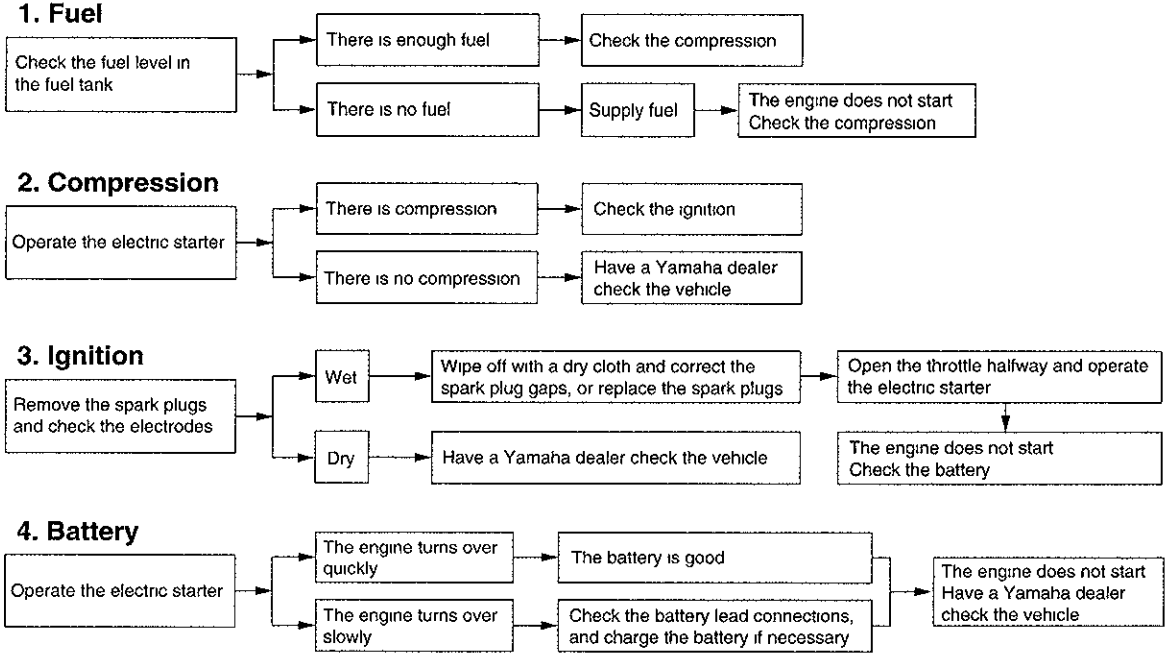

Engine overheating

EW000070

WARNING

- **Do not remove the radiator cap when the engine and radiator are hot. Scalding hot fluid and steam may be blown out under pressure, which could cause serious injury. Be sure to wait until the engine has cooled.**
- **After removing the radiator cap retaining bolt, place a thick rag, like a towel, over the radiator cap, and then slowly rotate the cap counterclockwise to the detent to allow any residual pressure to escape. When the hissing sound has stopped, press down on the cap while turning it counterclockwise, and then remove the cap.**

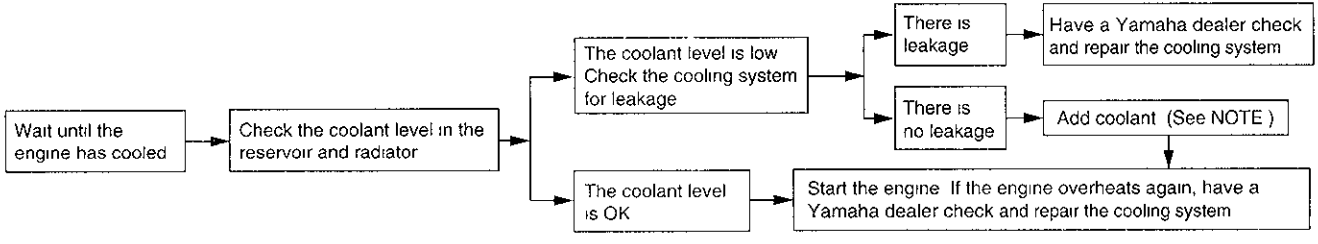

NOTE:

If coolant is not available, tap water can be temporarily used instead, provided that it is changed to the recommended coolant as soon as possible

MOTORCYCLE CARE AND STORAGE

Care 7-1
Storage 7-4

MOTORCYCLE CARE AND STORAGE

EAU04525

Care

While the open design of a motorcycle reveals the attractiveness of the technology, it also makes it more vulnerable. Rust and corrosion can develop even if high-quality components are used. A rusty exhaust pipe may go unnoticed on a car, however, it detracts from the overall appearance of a motorcycle. Frequent and proper care does not only comply with the terms of the warranty, but it will also keep your motorcycle looking good, extend its life and optimize its performance

7

Before cleaning

1 Cover the muffler outlet with a plastic bag after the engine has cooled down
2 Make sure that all caps and covers as well as all electrical couplers and connectors, including the spark plug caps, are tightly installed
3. Remove extremely stubborn dirt, like oil burnt onto the crankcase, with a degreasing agent and a brush, but never apply such products onto seals, gaskets, sprockets, the drive chain and wheel axles Always rinse the dirt and degreaser off with water

Cleaning

ECA00056

CAUTION:

- **Avoid using strong acidic wheel cleaners, especially on spoked wheels. If such products are used on hard-to-remove dirt, do not leave the cleaner on the affected area any longer than instructed. Also, thoroughly rinse the area off with water, immediately dry it, and then apply a corrosion protection spray.**
- **Improper cleaning can damage windshields, cowlings, panels, other plastic parts, and the muffler. Use only a soft, clean cloth or sponge with mild detergent and water to clean plastic. However, if the muffler cannot be thoroughly cleaned with mild detergent, alkaline products and a soft brush may be used.**

- **Do not use any harsh chemical products on plastic parts or the muffler. Be sure to avoid using cloths or sponges which have been in contact with strong or abrasive cleaning products, solvent or thinner, fuel (gasoline), rust removers or inhibitors, brake fluid, antifreeze or electrolyte.**
- **Do not use high-pressure washers or steam-jet cleaners since they cause water seepage and deterioration in the following areas: seals (of wheel and swingarm bearings, fork and brakes), storage compartments, electric components (couplers, connectors, instruments, switches and lights), breather hoses and vents.**
- **For motorcycles equipped with a windshield: Do not use strong cleaners or hard sponges as they will cause dulling or scratching. Some cleaning compounds for plastic may leave scratches on the windshield. Test the product on a small hidden part of the windshield to make sure that it does not leave any marks. If the windshield is scratched, use a quality plastic polishing compound after washing.**

After normal use

Remove dirt with warm water, a mild detergent, and a soft, clean sponge, and then rinse thoroughly with clean water. Use a toothbrush or bottlebrush for hard-to-reach areas. Stubborn dirt and insects will come off more easily if the area is covered with a wet cloth for a few minutes before cleaning.

After riding in the rain, near the sea or on salt-sprayed roads

Since sea salt or salt sprayed on roads during winter are extremely corrosive in combination with water, carry out the following steps after each ride in the rain, near the sea or on salt-sprayed roads.

NOTE:

Salt sprayed on roads in the winter may remain well into spring

1. Clean the motorcycle with cold water and a mild detergent, after the engine has cooled down.

ECA00012

CAUTION:

Do not use warm water since it increases the corrosive action of the salt.

2. After drying the motorcycle, apply a corrosion protection spray on all metal, including chrome- and nickel-plated, surfaces (except the titanium muffler) to prevent corrosion

Cleaning the titanium muffler

This model is equipped with a titanium muffler, which requires the following special care.

- Use only a soft, clean cloth or sponge with mild detergent and water to clean the titanium muffler However, if the muffler cannot be thoroughly cleaned with mild detergent, alkaline products and a soft brush may be used
- Never use compounds or other special treatments to clean the titanium muffler, as they will remove the finish on the outer surface of the muffler.
- Even the smallest amounts of oil, such as from oily towels or fingerprints, will leave stains on the titanium muffler, which can be removed with a mild detergent
- Note that the thermally induced discoloring of the portion of the exhaust pipe leading into the titanium muffler is normal and cannot be removed

After cleaning

1 Dry the motorcycle with a chamois or an absorbing cloth
2. Immediately dry the drive chain and lubricate it to prevent it from rusting
3 Use a chrome polish to shine chrome, aluminum and stainless-steel parts
4 To prevent corrosion, it is recommended to apply a corrosion protection spray on all metal, including chrome- and nickel-plated, surfaces
5 Use spray oil as a universal cleaner to remove any remaining dirt
6. Touch up minor paint damage caused by stones, etc.
7. Wax all painted surfaces
8. Let the motorcycle dry completely before storing or covering it

EWA00031

WARNING

- **Make sure that there is no oil or wax on the brakes or tires.**
- **If necessary, clean the brake discs and brake linings with a regular brake disc cleaner or acetone, and wash the tires with warm water and a mild detergent. Before riding at higher speeds, test the motorcycle's braking performance and cornering behavior.**

ECA00013

CAUTION:

- **Apply spray oil and wax sparingly and make sure to wipe off any excess.**
- **Never apply oil or wax to any rubber and plastic parts, but treat them with a suitable care product.**
- **Avoid using abrasive polishing compounds as they will wear away the paint.**

NOTE:
Consult a Yamaha dealer for advice on what products to use.

Storage

Short-term

Always store your motorcycle in a cool, dry place and, if necessary, protect it against dust with a porous cover

ECA00014

CAUTION:

- **Storing the motorcycle in a poorly ventilated room or covering it with a tarp, while it is still wet, will allow water and humidity to seep in and cause rust.**
- **To prevent corrosion, avoid damp cellars, stables (because of the presence of ammonia) and areas where strong chemicals are stored.**

Long-term

Before storing your motorcycle for several months:

1. Follow all the instructions in the "Care" section of this chapter.
2. Fill up the fuel tank and add fuel stabilizer (if available) to prevent the fuel tank from rusting and the fuel from deteriorating
3. Perform the following steps to protect the cylinders, piston rings, etc. from corrosion

a Remove the spark plug caps and spark plugs
b. Pour a teaspoonful of engine oil into each spark plug bore
c Install the spark plug caps onto the spark plugs, and then place the spark plugs on the cylinder head so that the electrodes are grounded (This will limit sparking during the next step.)
d Turn the engine over several times with the starter (This will coat the cylinder walls with oil)
e Remove the spark plug caps from the spark plugs, and then install the spark plugs and the spark plug caps

EWA00003

WARNING

To prevent damage or injury from sparking, make sure to ground the spark plug electrodes while turning the engine over.

4 Lubricate all control cables and the pivoting points of all levers and pedals as well as of the sidestand/ centerstand
5 Check and, if necessary, correct the tire air pressure, and then lift the motorcycle so that both of its wheels are off the ground. Alternatively, turn the wheels a little every month in order to prevent the tires from becoming degraded in one spot
6 Cover the muffler outlet with a plastic bag to prevent moisture from entering it
7. Remove the battery and fully charge it Store it in a cool, dry place and charge it once a month Do not store the battery in an excessively cold or warm place (less than 0 °C or more than 30 °C) For more information on storing the battery, see page 6-34

NOTE:
Make any necessary repairs before storing the motorcycle.

SPECIFICATIONS

Specifications 8-1
Conversion table 8-5

SPECIFICATIONS

Specifications

Model	**YZF-R1**
Dimensions	
Overall length	2,040 mm
Overall width	705 mm
Overall height	1,105 mm
Seat height	820 mm
Wheelbase	1,395 mm
Ground clearance	140 mm
Minimum turning radius	3,900 mm
Basic weight (with oil and full fuel tank)	193 kg
Engine	
Engine type	Liquid-cooled 4-stroke, DOHC
Cylinder arrangement	Forward-inclined parallel 4-cylinder
Displacement	998 cm^3
Bore × stroke	74 × 58 mm
Compression ratio	11 8 1
Starting system	Electric starter
Lubrication system	Wet sump

Engine oil

Type

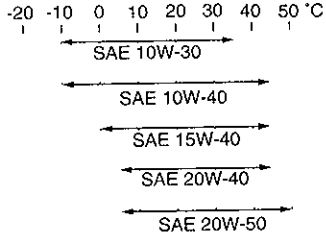

Recommended engine oil classification	API Service SE, SF, SG or higher

CAUTION:

Be sure to use motor oils that do not contain anti-friction modifiers. Passenger car motor oils (often labeled "ENERGY CONSERVING II") contain anti-friction additives which will cause clutch and/or starter clutch slippage, resulting in reduced component life and poor engine performance.

Quantity

Without oil filter cartridge replacement	2 9 L
With oil filter cartridge replacement	3 1 L
Total amount (dry engine)	3 8 L

Cooling system capacity (total amount)	2 45 L
Air filter	Oil-coated paper element
Fuel	
Type	PREMIUM UNLEADED GASOLINE ONLY
Fuel tank capacity	17 L
Amount remaining when the fuel level warning light comes on	3 3 L
Electronic fuel injection	
Model	INP-731/4
Manufacturer	NIPPON INJECTOR
Spark plug	
Manufacturer/model	NGK / CR9EIA 9 or DENSO / IU27D
Gap	0 8–0 9 mm
Clutch type	Wet, multiple-disc
Transmission	
Primary reduction system	Spur gear
Primary reduction ratio	1 581
Secondary reduction system	Chain drive
Secondary reduction ratio	2 688
Number of drive chain sprocket teeth (front/rear)	16/43
Transmission type	Constant-mesh 6-speed
Operation	Left foot
Gear ratio	
1st	2 500
2nd	1 842
3rd	1 500
4th	1 333
5th	1 200
6th	1 115
Chassis	
Frame type	Diamond
Caster angle	24°
Trail	103 mm
Tires	
Front	
Model	Tubeless tire
Size	120/70 ZR17 M/C (58W)
	120/70 ZR17 (58W)
Manufacturer/ model	Michelin / Pilot SPORT E
	Dunlop / D208FL

Rear	
Model	Tubeless tire
Size	190/50 ZR17 M/C (73W)
	190/50 ZR17 (73W)
Manufacturer/ model	Michelin / Pilot SPORT
	Dunlop / D208L
Maximum load*	202 kg
Tire air pressure (measured on cold tires)	
Up to 90 kg*	
Front	250 kPa (2 50 kgf/cm^2, 2 50 bar)
Rear	250 kPa (2 50 kgf/cm^2, 2 50 bar)
90 kg–maximum*	
Front	250 kPa (2 50 kgf/cm^2, 2 50 bar)
Rear	290 kPa (2 90 kgf/cm^2, 2 90 bar)
High-speed riding	
Front	250 kPa (2 50 kgf/cm^2, 2 50 bar)
Rear	250 kPa (2 50 kgf/cm^2, 2 50 bar)

* Total weight of rider, passenger, cargo and accessories

Wheels

Front	
Type	Cast wheel
Size	17 M/C × MT 3 50
Rear	
Type	Cast wheel
Size	17 M/C × MT 6 00

Brakes

Front	
Type	Dual disc brake
Operation	Right hand
Fluid	DOT 4
Rear	
Type	Single disc brake
Operation	Right foot
Fluid	DOT 4

Suspension

Front	Telescopic fork
Rear	Swingarm (link suspension)

Spring/shock absorber

Front	Coil spring / oil damper
Rear	Coil spring / gas-oil damper

Wheel travel

Front	120 mm
Rear	130 mm

Electrical system	
Ignition system	T C I (digital)
Charging system	
Type	A C magneto
Standard output	14 V, 32 A@ 5,000 r/min
Battery	
Model	GT12B-4
Voltage, capacity	12 V, 10 Ah
Headlight type	Quartz bulb (halogen)
Bulb voltage, wattage × quantity	
Headlight	12 V, 60/55 W × 2
Tail/brake light	L E D
Turn signal light	12 V, 10 W × 4
Auxiliary light	12 V, 5 W × 2
License plate light	12 V, 5 W × 1
Meter lighting	L E D
Neutral indicator light	L E D
High beam indicator light	L E D
Turn signal indicator light	L E D
Fuel level warning light	L E D
Oil level warning light	L E D
Engine trouble warning light	L E D
Engine speed indicator light	L E D

Fuses	
Main fuse	50 A
Headlight fuse	20 A
Signaling system fuse	15 A
Radiator fan fuse	15 A
Ignition fuse	15 A
Backup fuse (odometer and clock)	5 A
Electronic fuel injection fuse	15 A

EAU04513

Conversion table

All specification data in this manual are listed in SI and METRIC UNITS

Use this table to convert METRIC unit values to IMPERIAL unit values

Example

METRIC VALUE	CONVERSION FACTOR		IMPERIAL VALUE
2 mm	× 0 03937	=	0 08 in

Conversion table

METRIC SYSTEM TO IMPERIAL SYSTEM			
	Metric unit	Conversion factor	Imperial unit
Torque	m kgf m kgf cm kgf cm kgf	× 7 233 × 86 794 × 0 0723 × 0 8679	ft lbf in lbf ft lbf in lbf
Weight	kg g	× 2 205 × 0 03527	lb oz
Speed	km/h	× 0 6214	mi/h
Distance	km m m cm mm	× 0 6214 × 3 281 × 1 094 × 0 3937 × 0 03937	mi ft yd in in
Volume, Capacity	cc (cm^3) cc (cm^3) L (liter) L (liter)	× 0 03527 × 0 06102 × 0 8799 × 0 2199	oz (IMP liq) cu in qt (IMP liq) gal (IMP liq)
Miscellaneous	kg/mm kgf/cm^2 °C	× 55 997 × 14 2234 × 1 8 + 32	lb/in psi (lbf/in^2) °F

CONSUMER INFORMATION

Identification numbers 9-1
Key identification number 9-1
Vehicle identification number 9-1
Model label 9-2
Motorcycle noise regulation (for Australia) 9-2

EAU02944

Identification numbers

Record the key identification number, vehicle identification number and model label information in the spaces provided below for assistance when ordering spare parts from a Yamaha dealer or for reference in case the vehicle is stolen

1 KEY IDENTIFICATION NUMBER·

2 VEHICLE IDENTIFICATION NUMBER·

3. MODEL LABEL INFORMATION

○

●

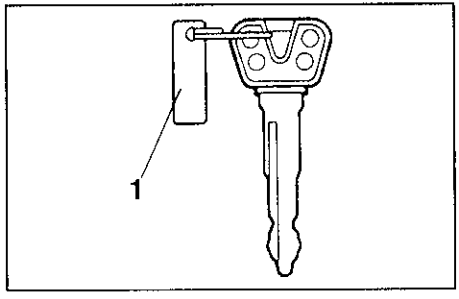

1 Key identification number

EAU01041

Key identification number

The key identification number is stamped into the key tag. Record this number in the space provided and use it for reference when ordering a new key.

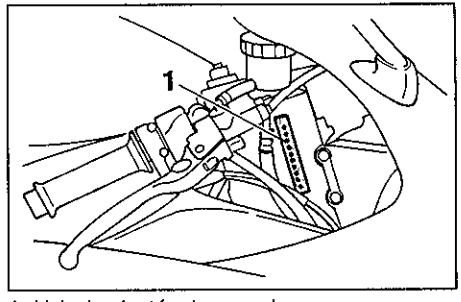

1 Vehicle identification number

EAU01043

Vehicle identification number

The vehicle identification number is stamped into the steering head pipe. Record this number in the space provided.

NOTE:

The vehicle identification number is used to identify your motorcycle and may be used to register your motorcycle with the licensing authority in your area.

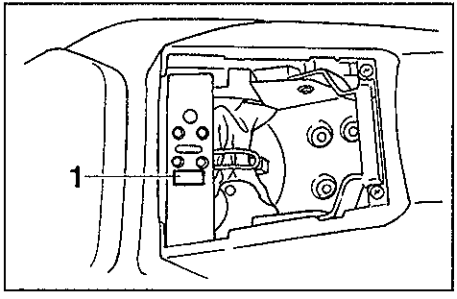

1 Model label

EAU04490

Model label

The model label is affixed to the frame under the passenger seat. (See page 3-17 for passenger seat removal and installation procedures) Record the information on this label in the space provided This information will be needed when ordering spare parts from a Yamaha dealer.

EAU01388

Motorcycle noise regulation (for Australia)

TAMPERING WITH NOISE CONTROL SYSTEM PROHIBITED:

Owners are warned that the law may prohibit

(a) The removal or rendering inoperative by any person other than for purposes of maintenance, repair or replacement, of any device or element of design incorporated into any new vehicle for the purpose of noise control prior to its sale or delivery to the ultimate purchaser or while it is in use; and

(b) The use of the vehicle after such device or element of design has been removed or rendered inoperative by any person.

INDEX

A
Air filter element, replacing 6-16

B
Battery 6-33
Brake and clutch levers, checking and lubricating 6-30
Brake fluid, changing 6-27
Brake fluid level, checking 6-26
Brake lever 3-13
Brake light switch (rear), adjusting 6-24
Brake pads, checking 6-25
Brake pedal 3-13
Brake pedal, lubricating 6-31
Brake pedal position, adjusting 6-24

C
Cables, checking and lubricating 6-29
Care 7-1
Catalytic converter 3-16
Clutch lever 3-12
Clutch lever free play, adjusting 6-23
Conversion table 8-5
Coolant 6-12
  Changing 6-13
  Checking 6-12
Coolant temperature warning light 3-4
Cowlings and panels, removing and installing 6-5

D
Dimmer switch 3-11
Drive chain, lubricating 6-29
Drive chain slack 6-27
  Adjusting 6-28
  Checking 6-27

E
Engine break-in 5-3
Engine oil and oil filter cartridge 6-9
Engine speed indicator light 3-4
Engine stop switch 3-12
Engine trouble warning light 3-3
EXUP system 3-23

F
Front fork, adjusting 3-19
Front fork, checking 6-31
Fuel 3-15
Fuel consumption, tips for reducing 5-3
Fuel level warning light 3-2
Fuel tank cap 3-13
Fuses, replacing 6-35

H
Handlebar switches 3-11
Headlight bulb, replacing 6-36
Helmet holders 3-17
High beam indicator light 3-3
Horn switch 3-11

I
Identification numbers 9-1
Idling speed, adjusting 6-18
Ignition circuit cut-off system 3-24
Indicator and warning lights 3-2

K
Key identification number 9-1

L
Labels, location 1-7
License plate light bulb, replacing 6-38
Luggage strap holders 3-23

M
Main switch/steering lock 3-1
Model label 9-2
Multi-function display 3-6

N
Neutral indicator light 3-3
Noise regulation (for Australia) 9-2

O
Oil level warning light 3-3

P
Parking 5-4
Part locations 2-1
Pass switch 3-11
Periodic maintenance and lubrication chart 6-2
Pre-operation check list 4-1

S
Safety information 1-1
Seats 3-16
  Passenger seat 3-17
  Rider seat 3-16
Shifting 5-2
Shift pedal 3-12
Shock absorber assembly, adjusting 3-21

Sidestand 3-24
Sidestand, checking and lubricating 6-31
Spark plugs, checking 6-8
Specifications 8-1
Starting and warming up a cold engine 5-1
Start switch 3-12
Steering, checking 6-32
Storage 7-4
Storage compartment 3-18
Supporting the motorcycle 6-39

T

Tachometer 3-11
Tail/brake light 6-37
Throttle cable free play, adjusting 6-19
Throttle grip and cable, checking and lubricating 6-30
Tires 6-19
Tool kit 6-1
Troubleshooting 6-43
Troubleshooting charts 6-44
Turn signal indicator lights 3-2
Turn signal light bulb, replacing 6-37
Turn signal switch 3-11

V

Valve clearance, adjusting 6-19
Vehicle identification number 9-1

W

Wheel bearings, checking 6-33
Wheel (front) 6-39
  Installing 6-40
  Removing 6-39
Wheel (rear) 6-41
  Installing 6-43
  Removing 6-41
Wheels 6-22

YAMAHA

YAMAHA MOTOR CO, LTD

PRINTED ON RECYCLED PAPER

PRINTED IN JAPAN
2001 12-0 5×1 CR
(E)